OUTDOOR HARDWARE

GUILD ◆ EDITION

CARVE A BALL & CLAW

Woodsmith®

Woodsmith.com

Vol. 45 / No. 266

SUPER-TUNE YOUR TABLE SAW

All New:

- Tea Table
- Sawhorse Set
- Outdoor Planter Bench
- Pizza Peel & Rocking Knife
- Nomad Storage System

Woodpeckers®

Precision Woodworking Squares

- One-piece central core.
- Stainless model includes scribing guides.
- Lip keeps the square flat on your work.
- Guaranteed accurate to ±.0085° for life.
- Available in inch or metric.

UNMATCHED ACCURACY LIFETIME Woodpeckers GUARANTEE EST. 1985

Precision Woodworking Square
Includes a Woodpeckers wall-mountable wooden case
12" 1281....**$129.99**
12" 1282SS Stainless Steel....**$159.99**
Other Sizes Available on ***Woodpeck.com***

Precision T-Squares

- Scribing guides on 1/16" centers.
- Beveled edge reduces parallax.
- Tight tolerance laser-engraved scale.
- 600mm metric version available.

Precision T-Square
Includes a wall-mountable Rack-It™
TS-12 12"....**$119.99**
TS-24 24"....**$139.99**
TS-32 32"....**$169.99**

Precision Taper Jig

- Repeatable tapers from 0° to 15°.
- Clamps material securely.
- Standard 32" capacity.
- Expands to 48".

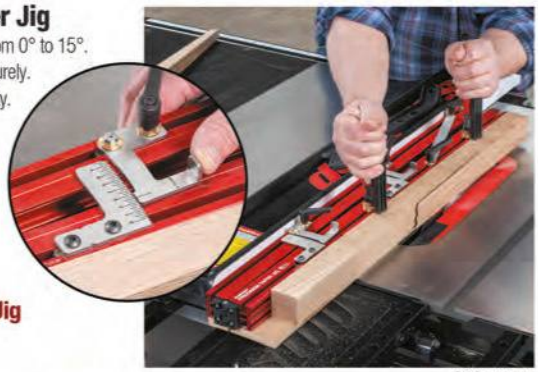

Table Saw not included.

Precision Taper Jig
32"....**$299.99**
48"....**$419.99**

Clamping Squares PLUS & CSP Clamps

- Holds stock at right angles.
- Works inside or outside.
- Works with any clamp.
- CSP Clamps speed the job.

Clamping Squares PLUS Rack-It™ Kit....**$299.99**

CLAMPZILLA™ 4-Way Panel Clamp

- Applies pressure both directions.
- Works with material from 5/8" to 4".
- Improved vertical pressure.
- Flatter panels faster.

ClampZILLA
18" Capacity....**$139.99**
38" Capacity....**$169.99**
50" Capacity....**$199.99**

EZEdge Corner Plane

- Sole is a perfect 90°.
- 3 radius profiles.
- 45° chamfer.
- Resharpens easily.

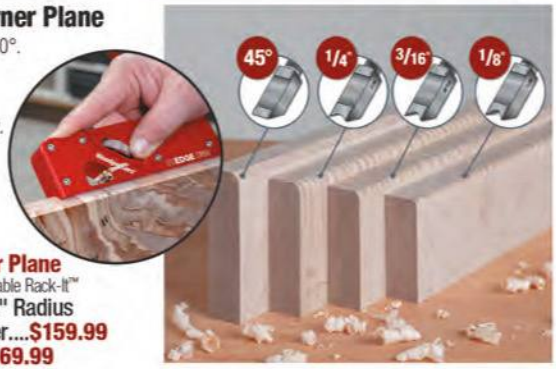

EZ Edge Corner Plane
Includes a wall-mountable Rack-It™
1/8", 3/16", 1/4" Radius
-or- 45° Chamfer....**$159.99**
Deluxe Set....**$569.99**

Pairs perfectly with Woodpeckers Saw Gauge

Align-A-Saw System

NEW TOOL

- Plate delivers a flatter, longer reference for aligning table to arbor.
- Precision ground to a flatness tolerance of .002".
- Gives you 12" to check miter groove alignment.
- Gauge measures 90° and 45° accurately.

Align-A-Saw System
Includes a Woodpeckers wall-mountable wooden case
Plate & Gauge Set....**$229.99**
Also Available Individually on ***Woodpeck.com***

Saw Gauge
Includes a Woodpeckers case
Set....**$99.99**

Woodpeck.com

MADE IN USA

AUTO-LINE™ DRILL GUIDE

- Perpendicular holes anywhere.
- Fence fits on all 4 sides.
- Works with most drills.
- 1" inside frame.
- 2" capacity outboard.
- Deluxe Kit includes extensions.

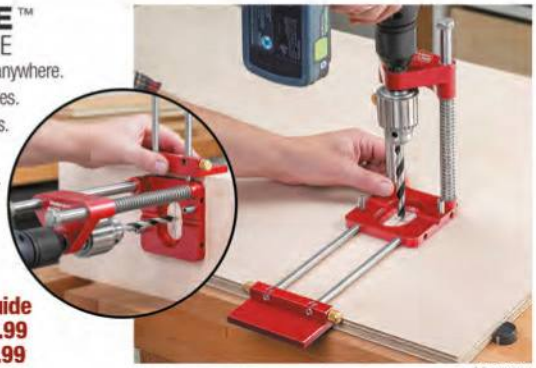

Drill not included.

Auto-Line Drill Guide
Drill Guide....**$299.99**
Deluxe Kit....**$399.99**

Table Saw not included.

Exact-90 Miter Gauge

- Square cuts every time.
- Miter bar self-adjusts 3/4" slots.
- Micro-adjust flip stop & 45° extension.
- 24" cross-cut capacity on most saws.
- Miter Bar available separately.

Exact-90
Miter Gauge....**$329.99**
25.5" Miter Bar....**$69.99**

Table Saw not included.

THIN RIP GUIDE™

- Safe, accurate jig for repeat cutting of thin strips.
- Works with 3/8" x 3/4" T-slot table grooves.
- Easily calibrated scales in both inch & metric.
- Ball bearing contact for smooth feeding.

ThinRip Guide....**$159.99**

DUAX Angle Drilling Table

- Auxiliary table mounts to your drill press.
- Adjusts to any angle from 0° to 90°.
- Teeth engage for repeatable angles.
- Optional Clamping Kit adds workholding ability.
- Designed to fit most drill presses 12" & larger.
- Ideal for chair and stool projects.

Duax Angle Drilling Table
Duax....**$299.99**
Deluxe Kit....**$339.99**

Drill Press not included.

Table Saw not included.

RIP-FLIP Fence Stop System™

- Relocates rip fence perfectly.
- Flips out of the way when not needed.
- Couple 2 stops for perfect fitting dadoes.
- Extra stops & dado couplers available.

RIP-FLIP Fence Stop System
*Fits SawStop**
36" Capacity....**$229.99**
52" Capacity....**$239.99**
*Powermatic/Biesemeyer**
30" Capacity....**$239.99**
50" Capacity....**$249.99**

Table Saw not included.

AUTOSCALE™ Miter Sled

- Scale accurate at any angle.
- Miter bar fits any 3/8" x 3/4" slot.
- Flip stop with micro-adjust.
- Stop extends to 50".
- Stops for 3-. 4-, 5-, 6-, 8- & 12-sided miters.

AutoScale Miter Sled
Deluxe....**$1089.99**
Left-*or*-Right Miter Sled....**$529.99**
Drop Zone....**$129.99**

StealthStop™ Miter Saw & Fence Stop System

- Stops retract completely within track.
- Micro-adjust provides precise control.
- Installs flat or as a vertical fence.
- Include track, stops, brackets & rule.

StealthStop
Left -or- Right
4' Fence....**$129.99**
4' Combination....**$199.99**

AUTOANGLE™ DRILL GUIDE

- Precision drilling without a drill press!
- Drill perfectly vertical or at any angle from 90° to 40°.
- Entry point is constant at any angle.
- Fence & stop system speeds repetitive work.
- Works with most hand drills.

AutoAngle Drill Guide
Standard....**$599.99**
Deluxe Kit....**$699.99**

Drill not included.

**NOTE: The Festool, SawStop, Powermatic & Biesemeyer brand names are the registered trademark of the respective company and is not associated with Woodpeckers, LLC.*

*Visit **Woodpeck.com** for hundreds of other American Made Tools!*

Woodsmith

AN ACTIVE INTEREST MEDIA PUBLICATION

EXECUTIVE EDITOR Phil Huber
SENIOR EDITOR Erich Lage
ASSISTANT EDITOR Rob Petrie

EXECUTIVE ART DIRECTOR Todd Lambirth
SENIOR ILLUSTRATOR Dirk Ver Steeg
SENIOR GRAPHIC DESIGNERS Bob Zimmerman, Becky Kralicek
CONTRIBUTING ILLUSTRATOR Erich Lage

CREATIVE DIRECTOR Chris Fitch
PROJECT DESIGN EDITOR Dillon Baker
PROJECT DESIGNER/BUILDER John Doyle
CAD SPECIALIST/BUILDER Steve Johnson
SHOP MANAGER Marc Hopkins
CONTRIBUTING PHOTOGRAPHERS Chris Hennessey, Jack Coyier

HOME GROUP
ACTIVE INTEREST MEDIA

Woodsmith® (USPS 465-410) (ISSN 0164-4114) is published bimonthly by the Home Group of Active Interest Media Holdco, Inc. The known office of publication is located at 2143 Grand Ave, Des Moines, IA 50312. Periodicals Postage Paid at Des Moines, IA, and additional mailing offices. Postmaster: Send address changes to Woodsmith, Box 37274, Boone, IA 50037-0274.

Woodsmith® is a registered trademark of Active Interest Media Holdco, Inc.
Copyright© 2023 Active Interest Media Holdco, Inc. All rights reserved.
Subscriptions: $29/year, Single copy: $7.99
Canadian Subscriptions: Canada Post Agreement No. 40038201. Send change of address information to PO Box 881, Station Main, Markham, ON L3P 8M6. Canada BN 82564 2911

Printed in U.S.A.

WoodsmithCustomerService.com

ONLINE SUBSCRIBER SERVICES

- **VIEW** your account information
- **PAY** your bill
- **RENEW** your subscription
- **CHANGE** your mailing or e-mail address

CUSTOMER SERVICE Phone: **800-333-5075** weekdays

SUBSCRIPTIONS
Customer Service
2143 Grand Avenue
Des Moines, IA 50312
subscriptions@aimmedia.com

EDITORIAL
Woodsmith Magazine
2143 Grand Avenue
Des Moines, IA 50312
woodsmith@woodsmith.com

ACTIVE INTEREST MEDIA

ADVERTISING SALES DIRECTOR Heather Glynn Gniazdowski
DIRECTOR OF PRODUCTION Phil Graham
VICE PRESIDENT CIRCULATION Paige Nordmeyer
VICE PRESIDENT MARKETING SERVICES Amanda Phillips
VICE PRESIDENT EVENTS Julie Zub
V.P. GENERAL MANAGER FINANCE Craig Stille
ACCOUNTING MANAGER Stephen ONeill
DIRECTOR OF RETAIL SALES Susan A. Rose
ADVERTISING DIRECTOR Jack Christiansen
847-724-5633
jchristiansen@aimmedia.com
AD PRODUCTION COORDINATOR Julie Dillon
GRAPHIC DESIGNER Julie Green

PRESIDENT, HOME GROUP **Peter H. Miller**
PRESIDENT, MARINE GROUP **Gary De Sanctis**
CFO **Stephen Pompeo**
CTO **Brian Van Heuverswyn**
CHAIRMAN **Andrew W. Clurman**
CHAIRMAN EMERITUS **Efrem Zimbalist III**

from the editor

Sawdust

As enduring as woodworking is, the craft goes through quite a few trends, fads, and popularity bubbles: handcut dovetails, pen turning, spoon carving, Windsor chairs, sticks chairs, Shaker furniture ... The list is extensive. What it shows is that woodworkers are a curious group with wide-ranging interests. For example, in the last few weeks, my "favorite tools" have been a biscuit joiner (for assembling a desk) and then an antique wood round plane (to create a large cove profile). Very different branches of the woodworking tree. I thoroughly enjoyed using both tools and each had me thinking and working in different ways.

I'd like to know what favorite tools you've used recently. Do they stay with you from project to project? Or does a new favorite float to the top with each item you make?

You'll find that practically every project in this issue has a "favorite" tool to go along with it. A pocket hole jig plays a big role in the nomad chest and the planter bench. A rasp stays by your side throughout the tea table build. The sawhorses rely on your dado blade. And the pizza tools require your router for all kinds of tasks.

By the time you read this, the second issue of the all-new ShopNotes will be available. Have you seen the first issue? Tell me what you think. If you haven't subscribed yet, head to www.ShopNotes.com to check out our digital magazine that will help you improve your workshop.

contents

No. 266 • April/May 2023

Projects

weekend project
Pizza Peel & Rocker Knife 28
Step up pizza night with a custom set of kitchen tools you make yourself. With matching walnut and cherry details, this set looks great too.

designer project
Nomad Storage Cabinet 34
Create the storage solution that suits your needs now and in the future. The stacking modular design allows you to mix and match components.

heirloom project
Newport Clawfoot Table 42
This small table combines a host of traditional details into a handsome package. You'll find quite a few woodworking skills inside as well.

shop project
Sawhorses & Worksuface 50
Sturdy, easy-to- build sawhorses are must-haves. Throw in a versatile worksurface and you have a combo that can tackle almost anything.

outdoor project
Deck Planter Bench 56
Storage, seating, and a built-in planter — this bench has it all. Simple, sturdy construction means you can build it in a weekend and be ready for entertaining.

Departments

from our readers
Tips & Techniques 6

All About
Installing Crown Molding 12

woodworking technique
Shaping a Claw Foot 18

great gear
Table Saw Checkup 22

in the shop
Outdoor Hardware 62

Sources 66

▲ A handy tray catches the dowel pins, preventing them from rolling off the table or into the blade.

Dowel Cutting Sled

Cutting dowel pins can be tedious, but a simple sled speeds things up. This sled doesn't take long to make, and even has a tray to keep the cutoffs corralled.

Begin by cutting the fence, sizing block, and base to size. Drill a hole through the sizing block of the same diameter as the dowels you'll be cutting.

Next, cut the tray sides to width, but leave them as one extra-long blank. Bevel the top, then cut and miter the pieces. Once they fit neatly on the base's end, glue up the sled.

To use the sled, first cut a kerf to determine length of the dowels. Push a dowel through the hole in the sliding block until its flush with the end and make the cut. Repeat for as many as you need.

Len Urban
Rancho Mirage, California

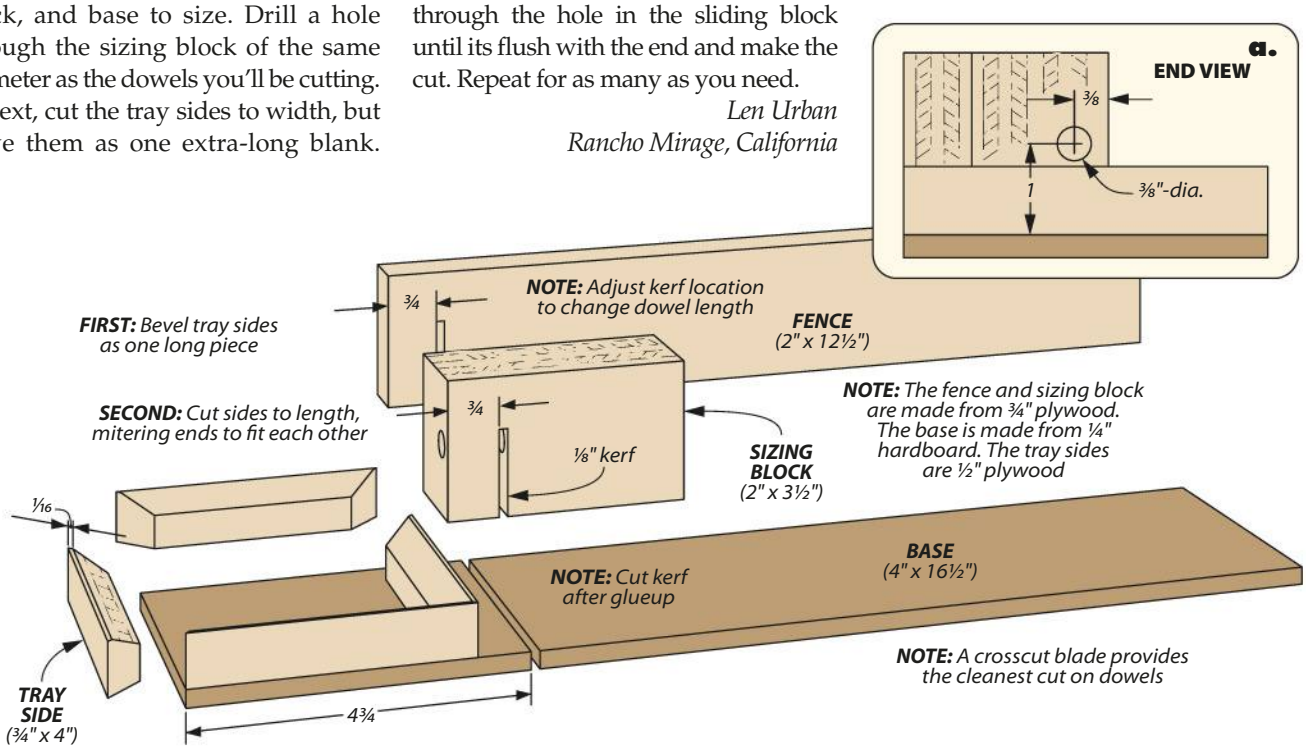

Easy, Accurate Biscuit Slots

Biscuits keep parts aligned during a glueup and provide a bit of extra strength to a project. A biscuit joiner is an easy way to add biscuits — just turn it on and plunge. They work well when slotting ends and edges, but keeping them square on the face of a piece can be tricky. Without a reference, it's hard to hold the joiner directly perpendicular to the piece, and an off-angle cut will ruin the joint. Luckily, there's an easy place to get a 90° reference — your router table.

Clamp your piece to the router table fence as shown at left. By referencing the joiner off the base, you're ensured perpendicular biscuits. To make the mating piece, remove the fence and clamp it to the table, then cut the biscuit slots.

Phil Huber
Appleton, Wisconsin

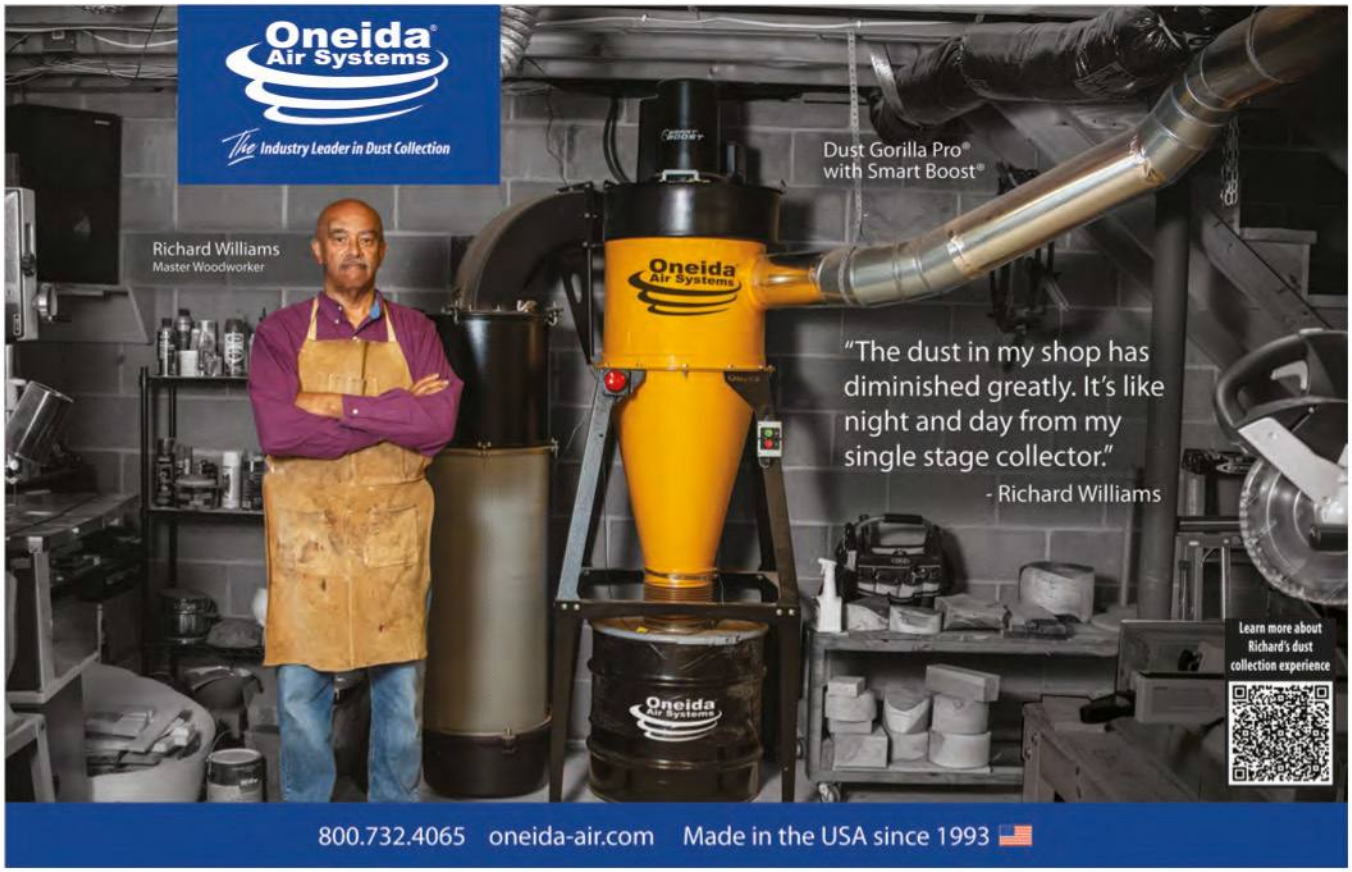

Illustrations: Becky Kralicek

Router Wrench & Collet Holder

Finding wrenches or collets in a crowded drawer can be annoying. To make sure they'd always be easily at hand when I'm working at the router table, I made this drawer insert.

I started by gluing up the top and base, then sizing them to fit snugly in my drawer. Once dry, I routed two slots for my wrenches, making the slots deeper where the heads would sit. Next, I drilled holes for my ¼" and ½" collets, plus two more to make room to grab the wrenches. Lastly, I put a chamfer around all of the slots and holes.

Colton West
Jupiter, Florida

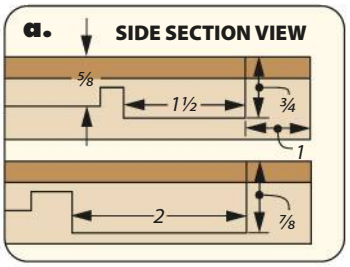

NOTE: *Top is made of ¼" hardboard. Base is made of ¾" plywood*

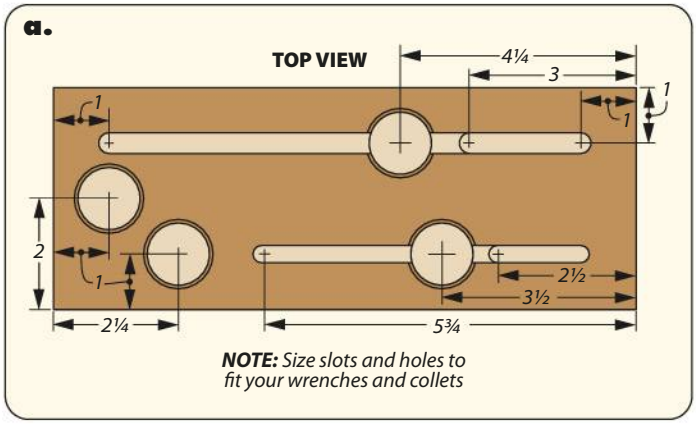

NOTE: *Size slots and holes to fit your wrenches and collets*

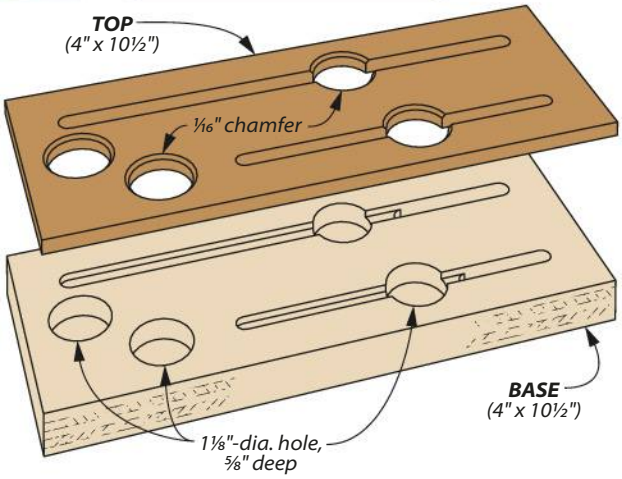

DIGITAL WOODSMITH

RECEIVE FREE ETIPS BY EMAIL

Now you can have the best time-saving secrets, solutions, and techniques sent directly to your email inbox. Simply go to:

Woodsmith.com

and click on,

Woodsmith eTips

You'll receive one of our favorite tips by email each and every week.

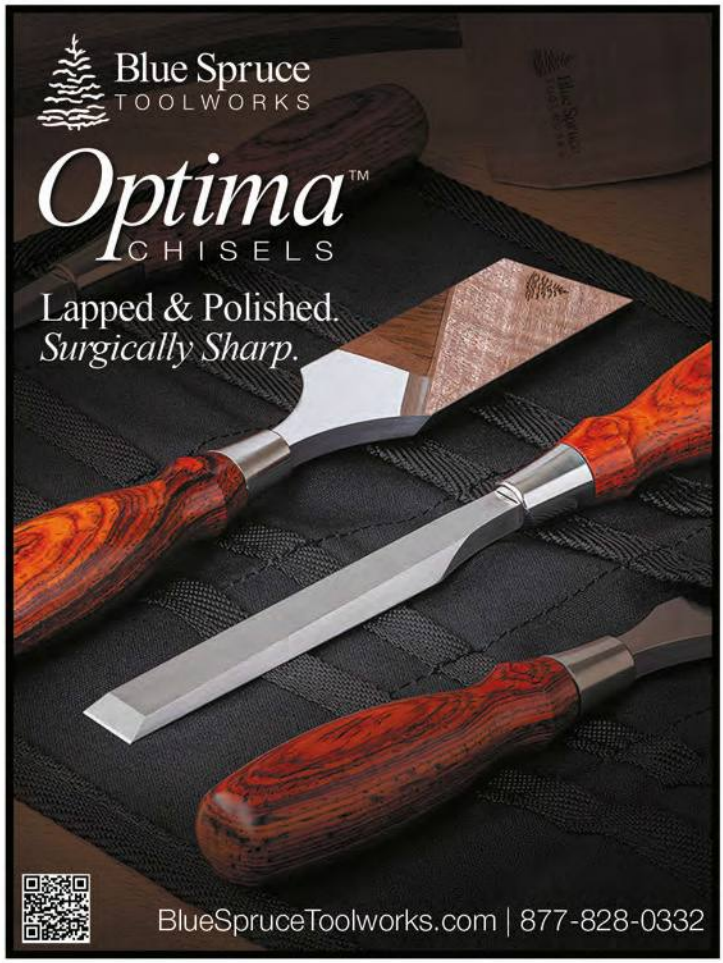
Blue Spruce
TOOLWORKS
Optima™
CHISELS
Lapped & Polished.
Surgically Sharp.
BlueSpruceToolworks.com | 877-828-0332

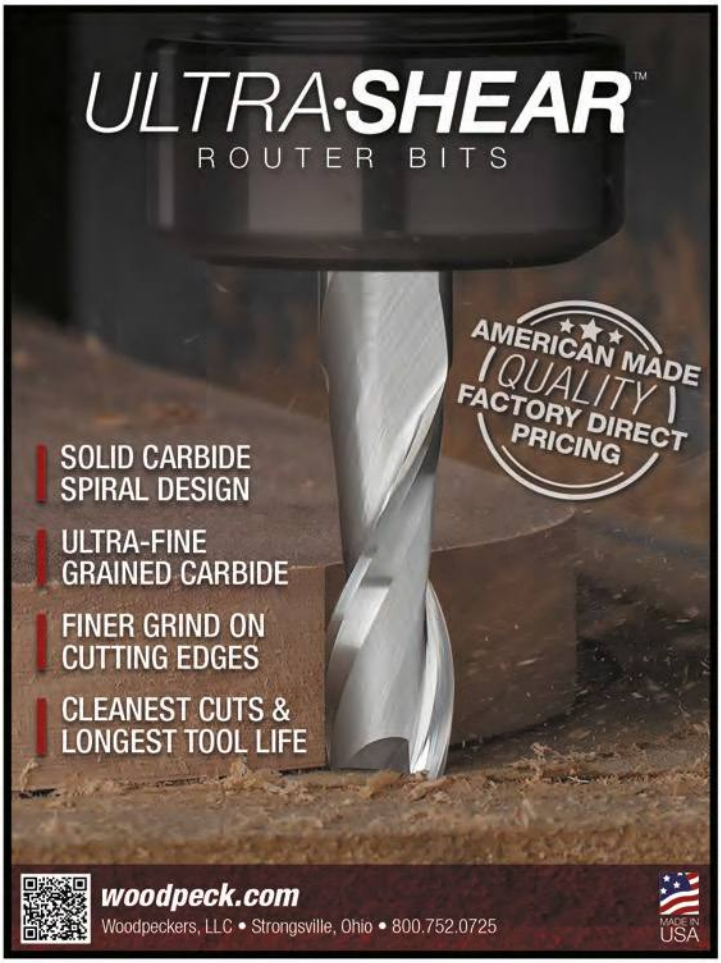
ULTRA·SHEAR™
ROUTER BITS
AMERICAN MADE
QUALITY
FACTORY DIRECT
PRICING
SOLID CARBIDE
SPIRAL DESIGN
ULTRA-FINE
GRAINED CARBIDE
FINER GRIND ON
CUTTING EDGES
CLEANEST CUTS &
LONGEST TOOL LIFE
woodpeck.com
Woodpeckers, LLC • Strongsville, Ohio • 800.752.0725
MADE IN
USA

Woodpeckers®
Slab Flattening
Mill·PRO
• Adjustable height router carriage with built-in dust ports.
• Standard width of 48-1/2" expands to 62" with optional extension.
• Standard length of 59" expands to 132" with optional extension.
• Flatten stock as thin as 3/4" & up to 3-7/16" without shimming.
• Straight-line edges on stock up to 2" thick.
MADE IN
USA
woodpeck.com
Woodpeckers, LLC • Strongsville, Ohio • 800.752.0725
Router not included.

QUICK TIPS

Laminate Snipping. *Tom Mason* of *Lowell, Indiana* doesn't just use his tin snips for tin. Materials like laminate can be difficult to can be difficult to cut down to size, but tins snips work well on any tough yet flexible material.

Easy-Apply Epoxy. *Bob Bartek* of *Rosewell, GA* uses a C-clamp to get the most out of his two-part epoxy syringes. Slowly twisting the clamp down gives you precise control of how much epoxy you need, and in the right proportions as well.

Rounded Dowels. *Dan Martin* of Galena, *OH* needed to round over the ends of some dowels. Rather than using the drill press, he drilled a hole 1/32" larger than the dowel in a scrap piece and turned the dowel with a hand drill, using the scrap as a guide to sand.

SUBMIT A TIP TO WIN

GO ONLINE

If you have an original shop tip, we would like to hear from you and consider publishing your tip in one or more of our publications. So jump online and go to:

SubmitWoodsmithTips.com

You'll be able to tell us all about your tip and upload your photos and drawings. You can also mail your tips to "Woodsmith Tips" at the editorial address shown on page 2. We will pay up to $200 if we publish your tip.

V-Shaped Bench Dogs

I get a lot of use out of my bench dogs, but they don't always cooperate with odd shapes. When it came time to rout a round piece, I made these bench dogs to hold it.

The head of each dog is just a shaped block of plywood that's counterbored to accept a short length of dowel. The shallow "V" allows the head to grip round workpieces, while the dowel fits into the dog holes of your bench. A hex bolt runs through the head and the length of the dowel with a counterbore in the top. A washer and lock nut thread on the bottom to hold everything together.

Marc Anderson
Big Spring, Kentucky

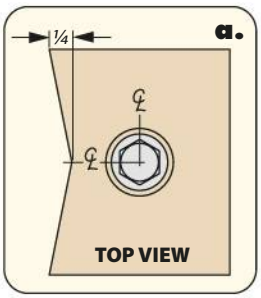

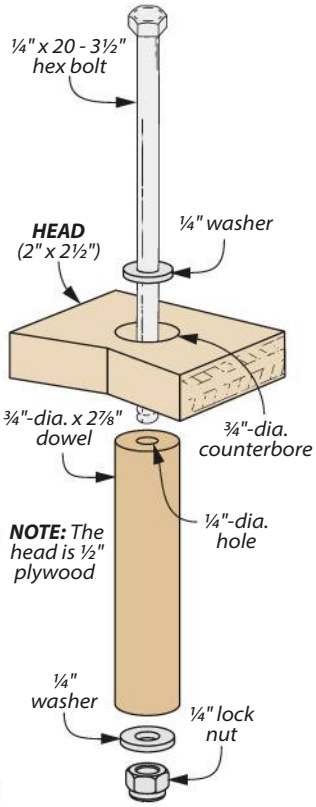

Plunge Depth Spacers

Spacer blocks have a number of uses, from setting blade height at the table saw to positioning the fence at the router table. They can also be a precise way of setting the depth stop on a plunge router

As shown above, simply position the block you want on the stop and set it. The advantage is being able to physically register the depth for greater precision, rather than just "eyeballing" it.

Douglas Jones
Odessa, Texas

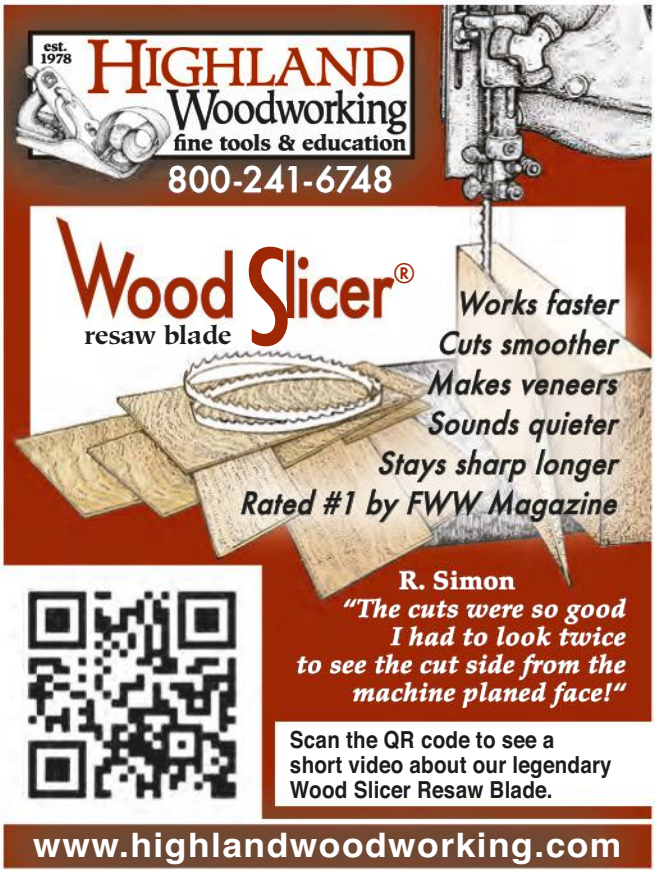

ALL About

Installing Crown Molding

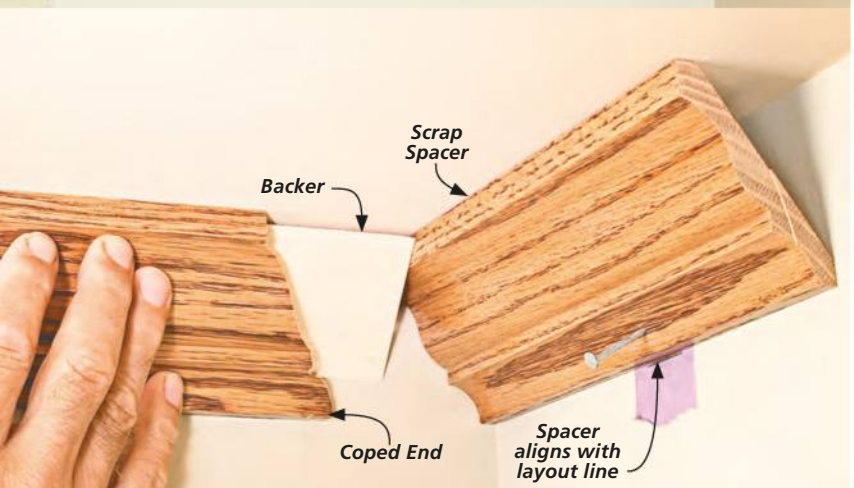

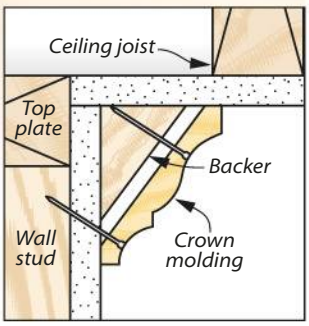

▲ One of the secrets to tight-fitting joints is to use a scrap piece of crown molding as a temporary spacer (right). The spacer registers the coped end of the first molding (left). Once the spacer is removed, it forms a recess into which you slip the uncoped end of the adjoining molding. Turn to page 14 to see this trick in action.

Once you've mastered the techniques for making a coped joint, installing crown molding in a room with four inside corners isn't difficult. (I'll get to outside corners later.) Still, there are several things to consider.

GO LONG. Take the length of the molding, for instance (measured from long tip of the coped end to long tip of the uncoped end). As a rule, cut the molding 1/8" longer than the distance from one wall to the molding on the opposite wall. This extra length will allow you to "spring" the molding into place for a tight fit.

BACKCUT UNCOPED END. At first, it might seem like you'd want to cut this end square. But by back cutting the end slightly, you'll avoid any problems that may arise from square-cut ends. The drawing on page 14 this shows this in action.

"PIN" THE MIDDLE. Another thing to keep in mind is how the molding gets attached. It's fastened with finish nails driven through the top and bottom edges into the ceiling joist (or backer) and the wall studs (refer to Illustration at left). When installing the nails, it's best to "pin" the molding in the middle first. This leaves both ends free so you can twist the molding slightly and adjust the fit of the joint as needed.

A DOUBLE-COPE DILEMMA. When installing crown molding, many carpenters start with the longest wall in the room and square-cut both ends to fit that wall. The two adjoining pieces of molding are then coped on one end and square-cut on the other. This means the last piece of molding has to be coped on both ends.

Now, coping one end of the molding isn't difficult. And neither is coping the second end for that matter. But keep in mind that while you're making that second coped cut, you have to trim the molding to final length at the same time. That complicates things considerably. Not to worry though, page 14 shows how to tackle this problem.

Illustrations: Bob Zimmerman; Written by: Erich Lage

FREE PROJECT PLANS FROM SHAPER

Discover the power of handheld CNC routing with Shaper Origin and build your own Elate Lamp.

Shaper Origin is an easy-to-use handheld CNC router that brings digital precision to the craft of woodworking. With Shaper Origin and Workstation, you can create perfect box joints, mortise and tenon joinery, and elegant furniture like the Elate lamp.

Scan QR to get your FREE project plans:
shapertools.com/r/elatelamp

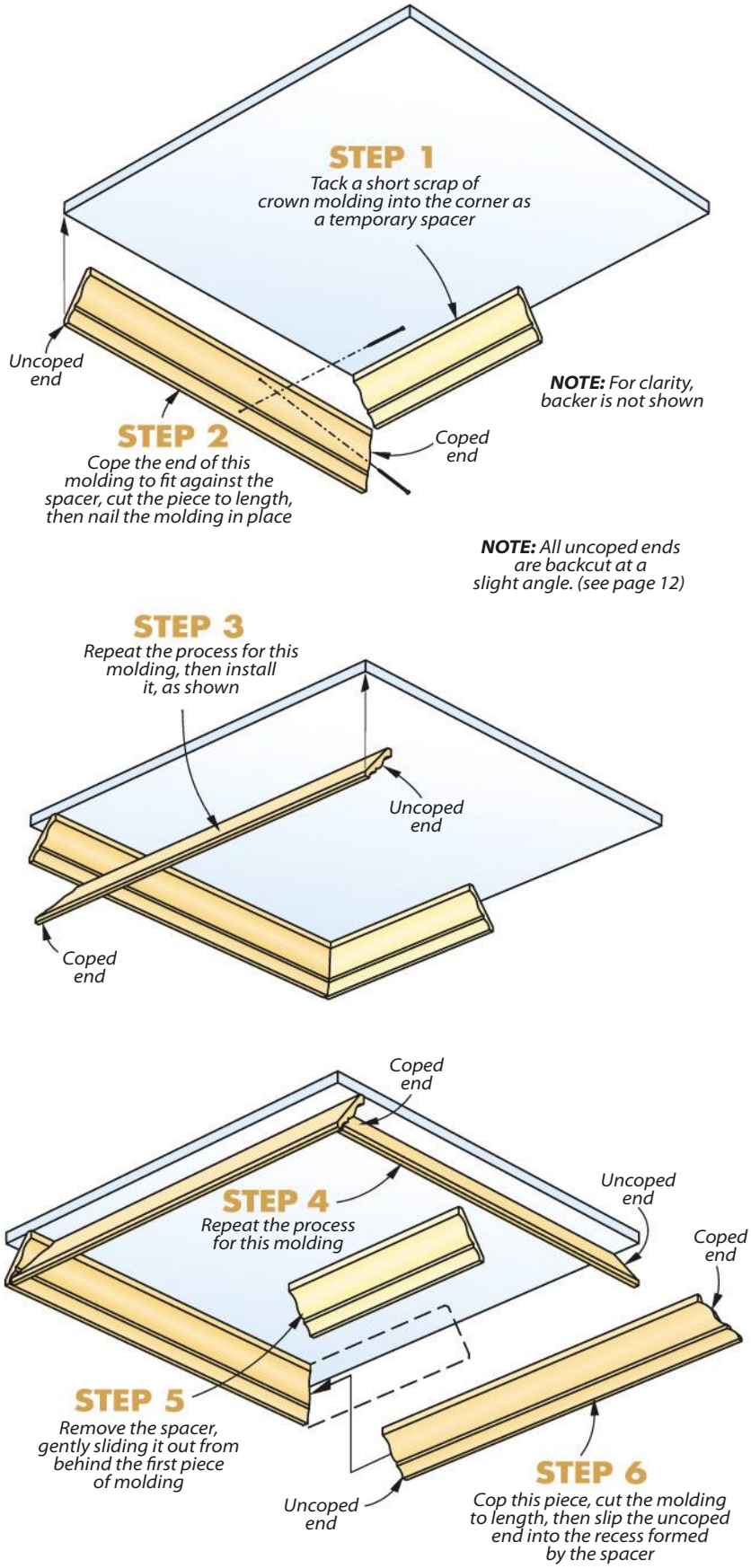

USE A SINGLE-COPE METHOD

One solution is to use a method that involves coping only one end of each molding. This coped end fits against a spacer made from a scrap piece of crown molding that's temporarily tacked in place (see Photo on page 12). The other (uncoped) end simply gets backcut as you see in the drawing to the left. For subsequent pieces, the process is the same — coping one end, then backcutting the uncoped end.

After working your way around the room, carefully remove the spacer. Then fit the uncoped end of the final piece into the recess that was formed by the spacer. The two pieces should fit together like a nut in a shell. If not, just give one piece or the other a slight twist until they fit just right, then nail them in place.

COMING UP SHORT

Ideally, every piece of molding would be long enough to span the length of the wall. In practice, you'll sometimes have to splice two (or more) pieces of molding together to make a single long molding. This joint is called a scarf joint.

In a scarf joint, a miter cut is made in each molding so the two pieces overlap. To accomplish that, it requires two types of cuts: an inside-corner cut on one piece and an outside-corner cut on the other. Here again, both cuts are made with the molding placed upside down in the miter saw jig and the saw set to 45°.

Scarf joints won't always fit perfectly because of slight variations in the wall or the moldings. But paying attention to how the pieces overlap will help conceal the differences. In general, if you enter the room and the splice is on the left, use a left-over-right scarf joint, like you see in the detail on the next page. If it's on the right,

use a right-over-left joint. As far as looks go, you'll want to take your time matching the grain of the two boards.

GLUE FIRST, THEN INSTALL

To keep the joint properly aligned, glue the splice together before installing the molding. Since the glue surface is fairly small, I use a short length of backer to strengthen the joint (Photo, right). Even with the backer glued on, the molding is still fairly fragile until it's installed, so handle it carefully.

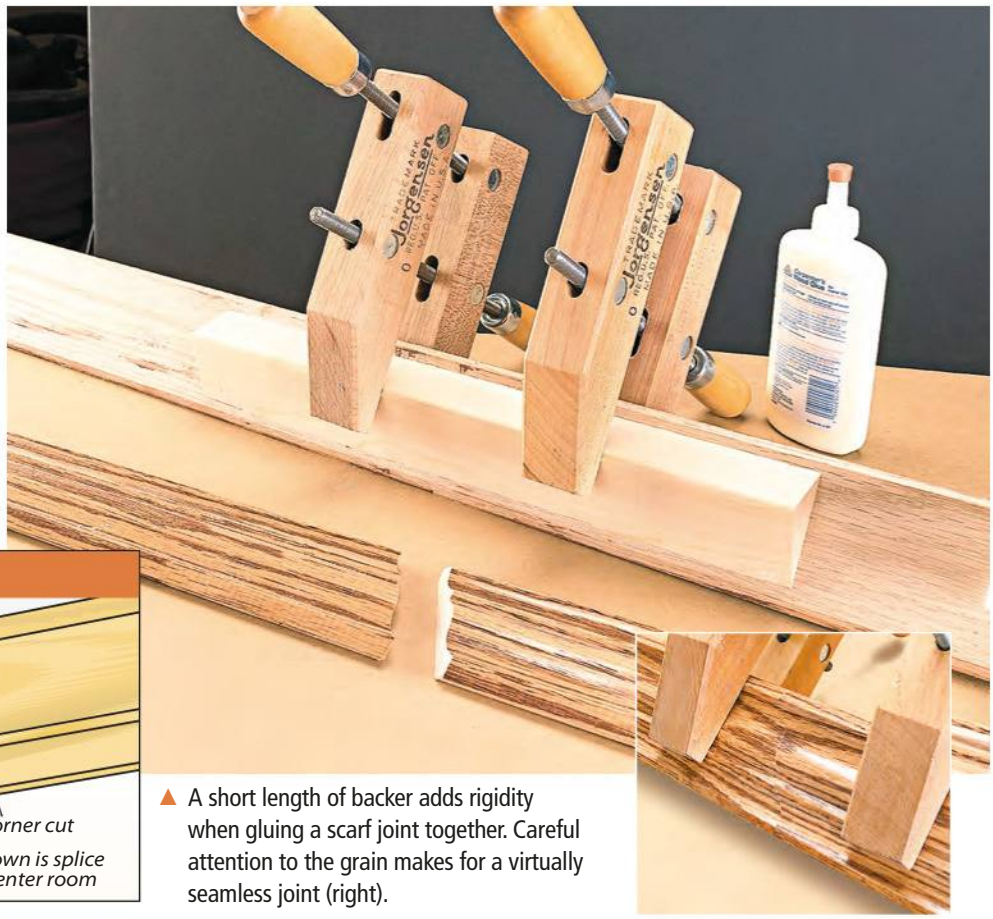

▲ A short length of backer adds rigidity when gluing a scarf joint together. Careful attention to the grain makes for a virtually seamless joint (right).

Scarf Joint Detail

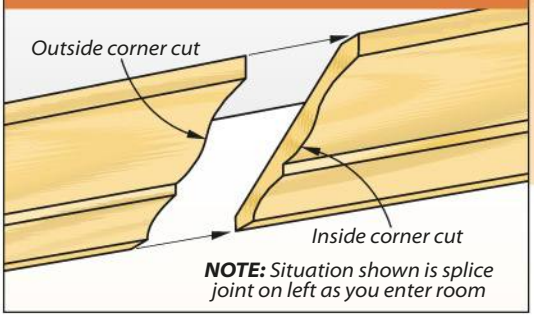

TUNG OIL WOOD STAIN

Exterior & Interior

NOVA EXO SHIELD

Longest Lasting

Maximum UV Protection
Deep Penetrating Oil

novausawood.com/exoshield

*Cedar outdoor kitchen finished with ExoShield Natural.

SNEAKING UP FOR A TIGHT FIT (OUTSIDE CORNER)

It's rare that any corner in a room is perfectly square. So in order to get a tight-fitting joint on an outside corner, the crown molding must be cut to match the actual angle of the corner. So how do you determine that angle? These steps will guide you.

Locate Upper Corner. To locate the upper outside corner of two adjoining moldings, mark along the top edge of each piece, forming intersecting lines.

Find the Angle. Mark the bottom edge of each molding where it meets the wall, and the top where it aligns with the crosshair.

Make A Starting Cut. With the miter saw rotated to 45° (right or left) make a cut about 1/4" to the waste side of the layout lines. This will give you an idea of the angle needed.

Find the Angle Part 2. Adjust the saw angle to make a cut parallel to the two marks. Do a test cut to the waste side. Readjust saw as needed and test it again.

The Final Cut & More. Now make the final cut, leaving the pencil lines intact. If needed, use a block plane for the final fitting (Inset Photo).

Check Your Work. Test fit your pieces to see how well you did. On occasion, a little more work with the block plane is needed to close the joint perfectly.

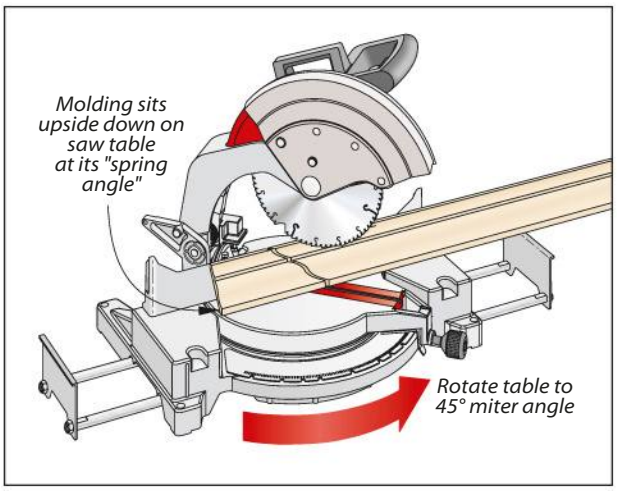

Miter Saw. On a miter saw, the blade and motor are mounted to a table that can be rotated to the left or right. Rotate the table to cut the workpiece at an angle.

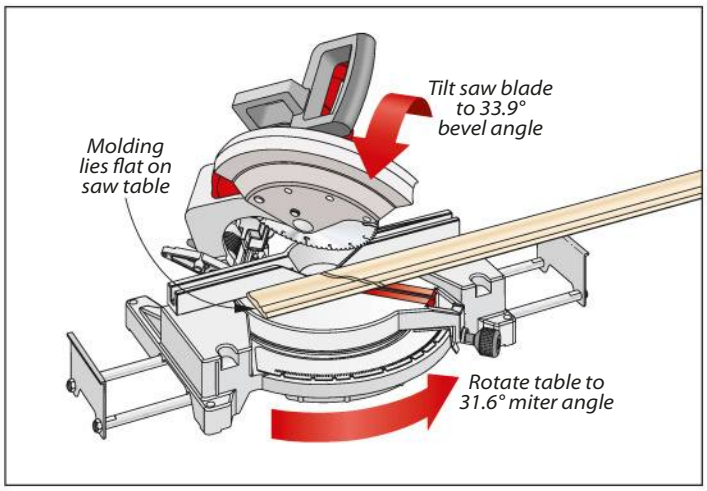

Compound Miter Saw. The rotating table and a pivoting head on a compound miter saw allow you to easily cut the compound miter that's necessary where molding pieces meet at a corner.

COMPOUND MITER SAW

The one thing we have not addressed when installing crown molding is how to cut the material using a compound miter saw. The drawings above show the two saws side by side. On the surface, they look similar. But they're quite different in how they cut material.

COMPOUND MITER SAW. A compound miter saw has an additional feature — the blade assembly can be tilted so that instead of coming down vertically, the blade comes down at an angle. This is called a bevel cut.

CUT A COMPOUND MITER. When you cut a miter and bevel together, this is called a compound miter. And that's the type of cut needed for cutting the ends of crown molding.

With a compound miter saw, you rotate the table to the proper miter angle and tilt the head to the corresponding bevel angle. Then lay the molding flat on the table to make the compound-miter cut. W

FUSION MAKER

Starting at $9,995

U.S. PRICING ONLY

- Laser engrave, cut, and inlay wood
- Customize projects for added value
- 24" x 12" x 7" work area
- IRIS™ Camera for artwork layout
- Affordable pricing for entry-level
- Made in the USA

EpilogLaser

888.437.4564 | sales@epiloglaser.com | epiloglaser.com/woodsmith

Carving Claw Feet

▲ All the chisels you see here are the *Swiss Made* line of chisels from *Pfeil*. Each one of them aids in carving different parts of the claw foot.

It's safe to say that the highlight of the Newport tea table is the legs that support it. That's because at the base of those legs resides wonderfully carved claw feet. So to help you make the tea table dazzle, we'll walk you through what it takes to carve the claw foot you see above. Let's start by addressing some things that will aid your woodcarving efforts.

HOLD STILL. Holding this gangly workpiece steady while you're jabbing and slicing it with sharp tools is a must. There's a perfect solution in the box at the top of the next page — a parallel jaw clamp that's locked into the vise on your workbench. This little set up provides you with infinite possibilities. You can pivot the clamp up or down in the vise. Also you can twirl the leg in the clamp's wide jaws, allowing you to easily carve on any face.

TOOLS. Speaking of carving, let's chat about those tools for a moment. I know there are folks out there that could carve this leg with a pocket knife and a sharpened spoon — I'm not one of them. For us lowly mortals there are plenty of woodcarving tools to rely on, such as the array of chisels you see on the left side of this page. These happen to be from the *Swiss Made* line of chisels made by *Pfeil*. The profiles listed are the ones used most often on the claw foot. Okay, let's look at the foot.

THE PATTERN. When you look at the photo of the foot above it's easy to get lost in the flowing shapes. Where on earth do you start chipping away at such a thing? The answer comes from underneath the foot. The elevation drawing on the next page shows the layout on the sole of the foot that positions the digits of the claw in the

Written by: Erich Lage

COVERING ALL THE ANGLES

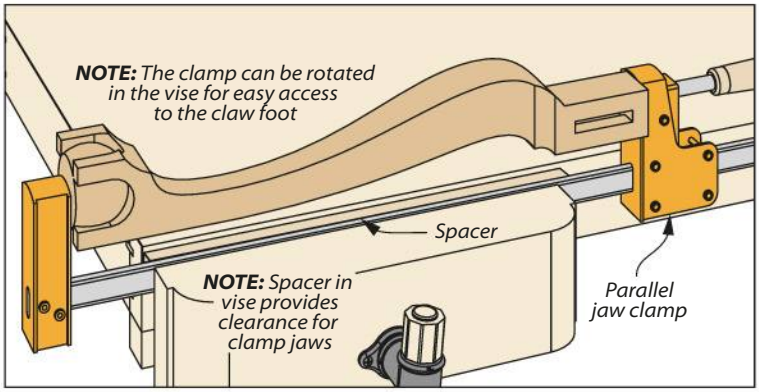

A Clamp in a Vise. Using a parallel jaw clamp to hold the leg as you carve the claw foot works nicely. The large jaws of the clamp hold the leg firmly in place yet allows you to rotate the leg to every surface.

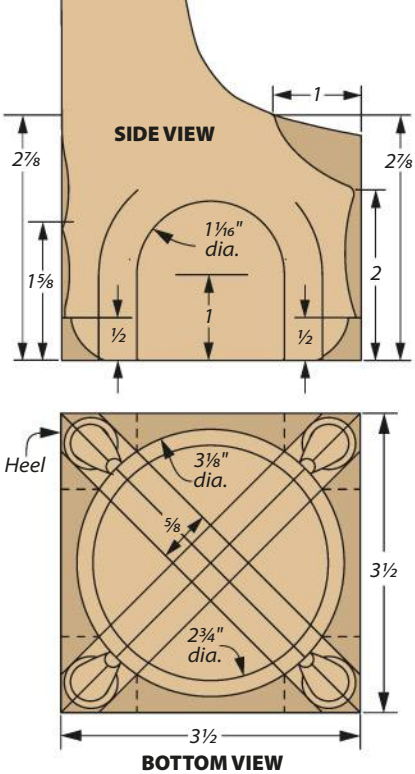

corners of the blank. There's a full-size version of the pattern at *Woodsmith.com/266*. The drawing above the sole of the foot shows the general location of the knuckles on what would be the side digits. I say general for a reason — as you start carving you'll be moving away from the world of measurements into the realm of sculpture. I can assure you that once you launch into carving, you'll find that it's better to focus on what looks good to the eye versus trying to force a set of dimensions onto the leg. With that in mind, turn the page and dive in.

Illustrations: Erich Lage

BIG TO SMALL — CREATING A CLAW FOOT

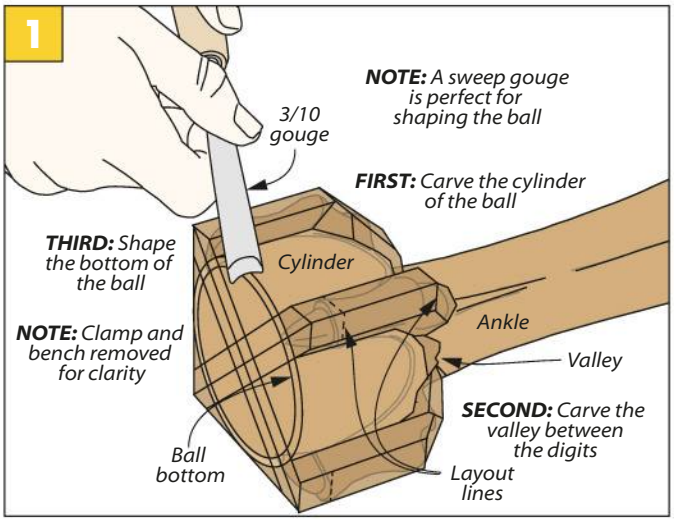

Big Shapes First. The big shape of the cylinder needs to be true to the leg. So as you carve away the waste, check the walls of the cylinder to the sole with a small square.

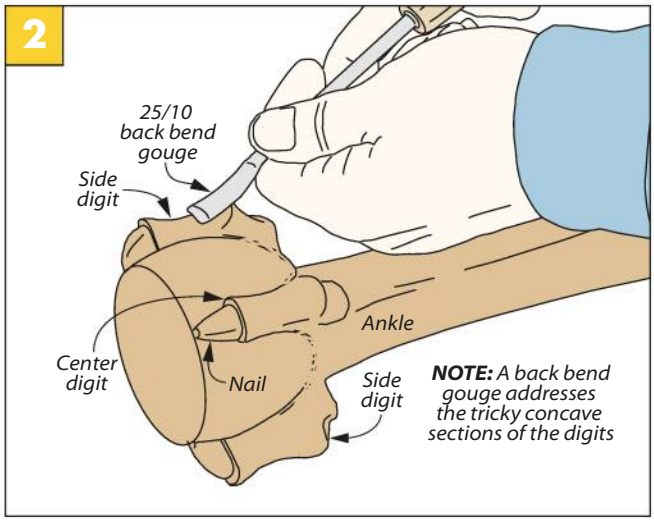

Digits, Knuckles & Nails. The location of the front three digits' knuckles are similar and should be shaped at the same time. Step back occasionally and look at the foot as a whole.

▲ Here are some tools that you'll find handy when it comes to refining the ball and claw foot. First, some shaping with rasps and files. The sanding wheel on your *Dremel* works wonders, and the sanding sticks smooth the tight spots.

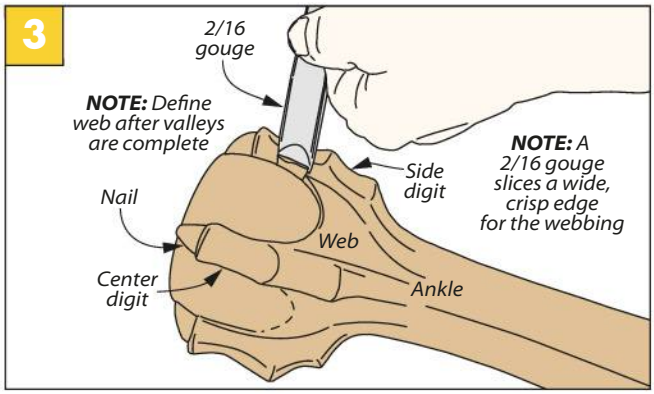

Forming the Web. The web of the foot lies between the digits and are just an accent that rests on top of the valley. It's just a matter of scaling down the ball at the top a little.

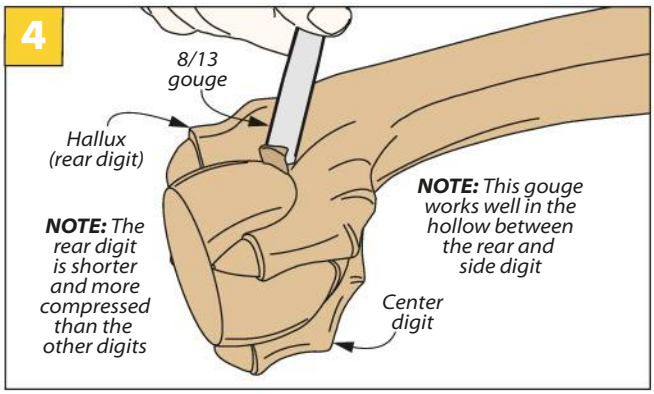

Don't Forget the Back. It's easy to get focused on the front of the foot, but the back deserves just as much attention. Notice that more of the ball is hidden under the web.

GETTING STARTED

Now that you've transferred the pattern to the legs and are ready to make some shavings fly, I want to suggest something. Even if this isn't your first adventure in carving, it would be wise to do a practice leg to get a feel for the lay of the land, so to speak. It's not like you would have to finish the leg completely, just do enough to build your confidence.

ANATOMY OF A CLAW. Before we dig in let's be clear on the parts of the claw (from the view of a woodcarver, not an ornithologist). Our claw has four digits (fingers). The rear digit is referred to as the "hallux," and that's the only fancy bird word that will be used here. It's the opposable digit, like your thumb. In front of it is the center digit — it's the longest of the four. Either side of that are the side digits that are nominally shorter than the center digit. The rear digit has one knuckle, the others have two. All the digits have a nail at the end. The webbing is more distinct between the front three digits.

BIG TO SMALL. As I mentioned earlier, what you're doing here is more like sculpting than woodworking. Which means working big to small. Large shapes first — take a step back and examine them from all angles. Figure 1 is an example of this. First you shape the cylinder of the ball. As you develop each section between the digits, check the walls of the cylinder with a square. Then you can remove the material higher up that rolls into the ankle where the digits disappear. When you're comfortable with the form the foot is taking you can start rolling over the bottom of the ball.

Figure 2 shows the knuckles and nails being defined in each of the digits. As with the big shapes, you want to take the time to compare the position of the knuckles on the three front digits. No need to break out a micrometer, but you want them visually consistent. In Figure 3 you're dialing in on the details — such as the webbing between the digits, along with any fussy things you might want to add to the knuckles and nails. For the most part you're dealing with aesthetic choices here.

COVER YOUR BACK. Lastly, don't forget the back of the foot (Figure 4). This digit is shorter — and when carved with that in mind — it will convey the claws' grip on the ball in a convincing way that brings the foot to life. W

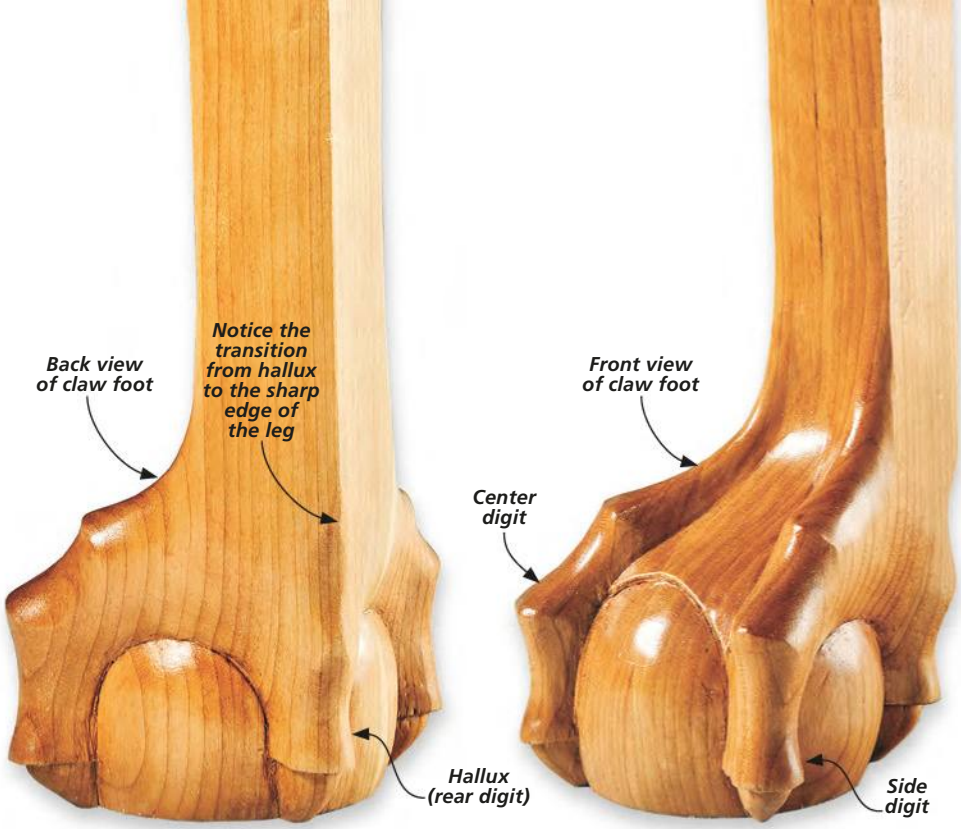

▲ Notice the rear digit (the hallux) in the back view is shorter and its knuckles are more compressed than the center digit you see in the front view. This detail thrusts the ball forward in the claw, stretches the webbing in front, and gives a more dynamic feel to the whole carving.

I USE A WAGNER MOISTURE METER BECAUSE:
These are family heirlooms

80% of all problems in wood projects are caused by moisture content issues. A quick and simple, non-damaging moisture meter reading can save you from angry customer calls, unnecessary repair time, and a bad reputation. Call today and learn why Wagner's industry-leading Orion meters may just be the most important tool for your job.

WAGNER METERS (877) 721-8872 | WagnerMeters.com

Table Saw Tuneup

Let's be honest, the table saw is one of the biggest workhorses in most shops, if not the biggest. When it comes to ripping, few tools even compare. For crosscutting, a miter gauge or table saw sled provides better precision than many miter saws. As for joinery, there are few projects that I don't end up making a dado or groove at the table saw at least once.

Of course, even the most diligent workhorse needs a little care now and again. Because they're used so often, table saws often get gunked up, misaligned, and worn down. Thankfully, this isn't anything that can't be fixed with a little time, some manpower, and the right tools.

CLEANING

Whenever it comes time to tune up a tool, it's best to start off by giving it a good spring cleaning. Alongside sawdust, pitch and resin pose a problem to table saws if they build up enough, and rust can threaten the metal on the tabletop. To kick off the diagnostic, open up your table saw cabinet and

Written by: Rob Petrie

clean out any sawdust before heading further in.

PITCH & RESIN. Cutting wood is always going to result in the build up of pitch and resin, and built-up gunk may interfere with how your saw runs. A regular cleaning routine will keep you from reaching that point, but it can be tricky to get at all the various parts inside.

Brushes and solvents will do most of the work here. A solvent like mineral spirits or citrus solvent works well, but avoid lacquer thinner, as it could strip the paint and expose the metal to rusting. Keep the solvent away from the bearings as well — if some of it gets in a bearing, it can dissolve the lubricant within.

Use a toothbrush and solvent to remove any built-up pitch or resin on the trunnion. For tough spots, use a larger brush to saturate the area in solvent. Give it some time to penetrate gunk, then scrub at it with a wire brush.

▲ For tougher spots, coat a paint brush in solvent and allow it to soak the area. Scrub with a wire brush after a few minutes.

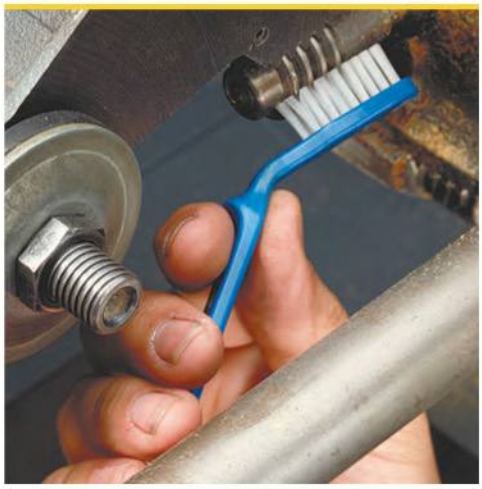

▲ To get at those hard to reach gears, heat up the handle of an old toothbrush, then bend it to the angle you need.

PROTECTION. After the interior of the saw is cleaned up, give those parts a bit of lubrication. A spray-on dry lubricant works well as it coats the parts evenly, making it less likely to attract dust and chips.

SAW TABLE. The last place to look over is the top of the saw. If the top has any traces of rust, they can be sanded off. Use a high-grit sandpaper along with a light solvent (like mineral spirits) to wet sand the area.

With that, the cleaning is out of the way. Now it's time to dig deeper and start really tuning up the table saw.

Illustrations: Bob Zimmerman

BLADE & TRUNNION ALIGNMENT

To begin the true tuneup, start by looking at the blade. Check how it adjusts, then how it sits relative to the miter slot.

RAISE & TILT MECHANISMS. The first place I check on my table saw is the blade adjustments. If there's a bit of play in the cranks that raise or tilt the saw blade, chances are this is an issue with the worm gears.

A gear can be adjusted by loosening the locking nut holding it in place and positioning it correctly against the crank. Make sure the gear and crank fit snugly together, then tighten the locking nut again.

Be careful not to overtighten the mechanisms. This will make adjusting the saw difficult and could cause excess wear.

BLADE & MITER SLOT ALIGNMENT. Next, it's important to check that the blade is sitting parallel to the fence and miter slot. A table saw gauge (such as the *Woodpeckers' Saw Gauge 2.0* shown below) is an easy way to check the alignment on various parts of your table saw.

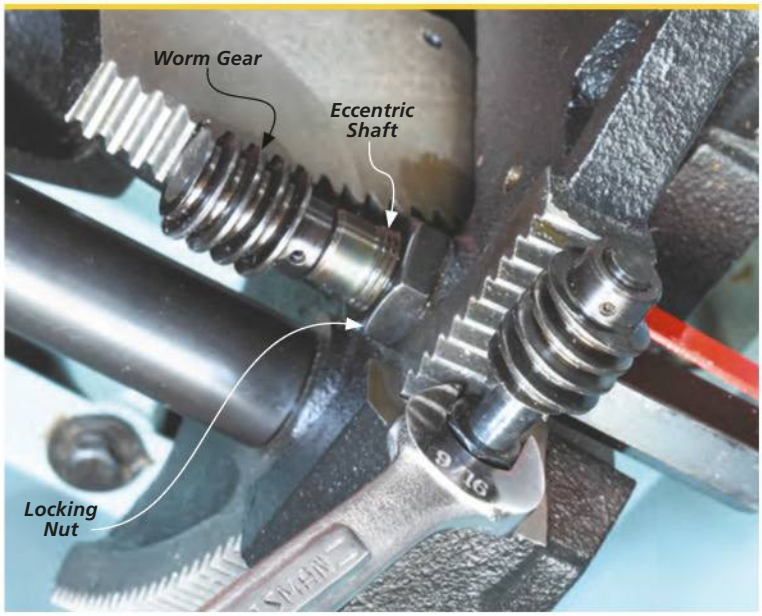

▲ The worm gear is mounted on the eccentric shaft and held in place by the locking nut. Adjusting the worm gears is simply a matter of loosening the locking nut, fitting the gear against the cog, and retightening the nut.

To check the blade's alignment relative to the miter slot, first use a marker to mark one tooth on the saw blade. Position the saw gauge in the miter slot and against the mark, then zero out the gauge.

Rotate the saw blade and slide the gauge alongside so they end up making contact again. If there was no movement on the dial, then the blade is aligned. If there was, you'll need to adjust the trunnions to get it in line.

ADJUSTING THE TRUNNIONS. First, remove the belt and motor from the trunnions. This makes things lighter and gives you a little extra space to work.

The front and rear trunnions are bolted to the underside of the table and the arbor assembly. Adjusting the trunnions simply takes loosening the bolts and shifting them to bring things into alignment. Loosen the bolts as little as possible and leave one of the front trunnion bolts a little tight to act as a pivot point.

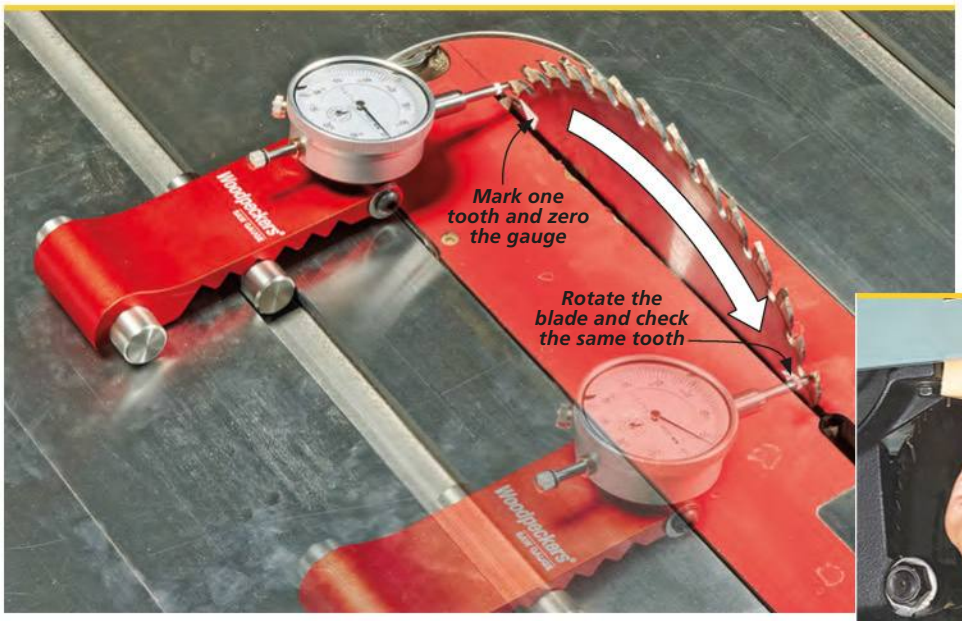

▲ The *Woodpeckers' Saw Gauge 2.0* uses steel pins to fit any size miter slot. Zero the gauge at one end of the blade and run it to the other side to check if the trunnion needs adjustment. If so, use a mallet to tap it in line (inset photo).

▲ Position the saw gauge above the arbor and rotate the shaft. Watch the gauge as you rotate — any movement on the dial indicates runout in the arbor.

▲ By tilting the arbor up, the saw gauge can also be used to check the alignment of the flange. Rotate the flange and watch for any dial movement to indicate runout.

Use a piece of scrap and a mallet to tap the rear trunnion into alignment (lower right photo, previous page) Retighten the bolts, checking the blade alignment as you tighten.

DEALING WITH RUNOUT

Wobble in the arbor, flange, or blade can cause an uneven cut on the table saw as well. This is called runout. You can rough-check the arbor for runout by hand. Push and pull it to check for play and spin it by hand to see if it moves smoothly. If you feel any play, a dial indicator can help identify the issue.

CUT OUT THE RUNOUT. So, what do you do if you have some runout? While not ideal, a small amount won't cause too much trouble. However, if the runout is excessive (over 0.003" on either the arbor or the flange) then you're going to have some issues. This could be the sign of a bad bearing, a bent arbor, or a warped flange. Either way, it's best to look for replacement parts.

▲ Rest a straightedge against the outside faces of the two pulleys. Ideally, the straightedge will rest flush against both faces. If it doesn't, shift either the pulleys or the motor to bring them into alignment.

▲ Most table saws have set screws that can be adjusted with Allen wrenches to set the stops. Adjust the screw until the blade is positioned at the correct angle.

MOTOR & PULLEY ALIGNMENT

With the blade aligned, it's now time to reinstall the motor and belt. After those are back in place, you can check the alignment of the motor and arbor pulleys.

If the pulleys are misaligned from each other, it may cause the belt to vibrate and skip as it runs. Use a straightedge to check the pulleys. If they are misaligned, then the pulleys need to be adjusted on their shafts or the motor can be repositioned on the mounting plate.

Check the drive belt for wear. If it's worn, cracked, or frayed then it's time for a replacement.

SETTING STOPS. Most table saws have stops for 90° and 45° tilts. However, you may find that with use these stops become a little less than accurate. Luckily, they're relatively easy to adjust. The exact method differs between brands of saws (here's where I advise to check the manual before diving in), but chances are you'll only need an Allen wrench and a drafting triangle to adjust the tilt stops.

Start by raising the blade to full height and using the triangle to check if the blade is sitting square to the table. Most saws use adjustment screws on the side or on the table to change the position of the stops. Adjust the screw until the blade sits at 90°.

For the 45° stop, tilt the blade to the stop and repeat the process again with the drafting triangle. Once both stops have been set, tilt the blade to both extremes and check the angles again with the triangle.

LEVELING TABLE. The first thing to check on the table is the insert — it should be sitting flush with the saw table, and it shouldn't rock when pressure is applied. Most inserts can be adjusted by four set screws. Raise and lower these as necessary, watching a straightedge, until the insert is fully flush with the table.

To level the extension wings to the table, you'll need a decently long straightedge. Lay it spanning across the wings and the table, then check if they're sitting flush with each other.

If adjustment is needed, the wings of a table saw can usually be shifted by loosening the bolts holding them in place underneath. Simply loosen the bolts, reposition the wing, and tightening the bolts back up. Check the wing with the straightedge again to make sure nothing shifted as you were tightening the bolts, then repeat the process on the opposite side.

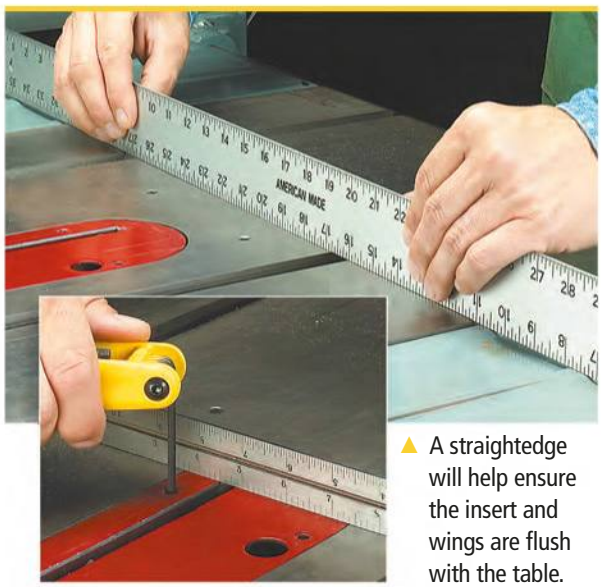

▲ A straightedge will help ensure the insert and wings are flush with the table.

RIP FENCE & MITER GAUGE

Two accessories make all the difference in how your table saw cuts: the rip fence and the miter gauge. Any discrepancies between those and the blade are going to have ill effects.

RIP FENCE. The rip fence is one of the most vital parts of a table saw for making precise and safe rip cuts. If the fence is off, you'll end up with anything from a wider kerf to a burnt edge to a board getting kicked back at you. The rip fence needs to be checked in two ways: parallel and perpendicular.

A dial indicator (such as the *Saw Gauge 2.0*) is helpful once again when setting the rip fence parallel. Set the indicator in the miter slot and measure the distance to the rip fence; it should be the same from front to back. If the rip fence needs adjustment, this can usually be done via set screws on the fence's bottom with an Allen wrench.

Once it's parallel, repeat the process with a drafting triangle against the top of the saw table and the face of the rip fence to make sure the fence is sitting perpendicular as well.

MITER GAUGE. To make quality crosscuts, the miter gauge needs not only to be perpendicular with the blade, but the bar also needs to fit in the miter slot without play. Give the gauge a wiggle in the slot. If there's play, there's a few ways to fix it. Some miter gauges have bars that can be adjusted by screws to close up the play. However, if you have a basic miter gauge, one way to get rid of the play is by dimpling the edges of the bar with a punch (photo at right).

Lastly, make sure the gauge's stops are aligned to the blade. Start of by using a drafting triangle to set the 90° and the 45° stops on the gauge. With that, the table saw is tuned up and ready for some quality shop time. W

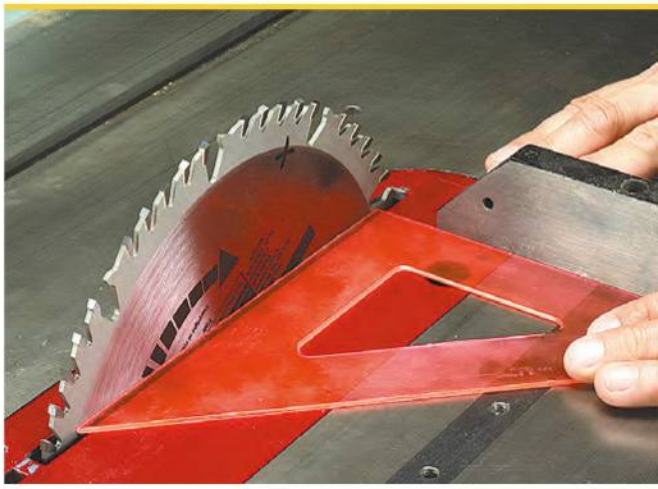

▲ A drafting triangle is a good means of squaring the miter gauge to the blade. If the bar on the gauge has some play, a hammer and punch can be used to "widen" it.

Written by: Erich Lage; Project Design: Chris Fitch

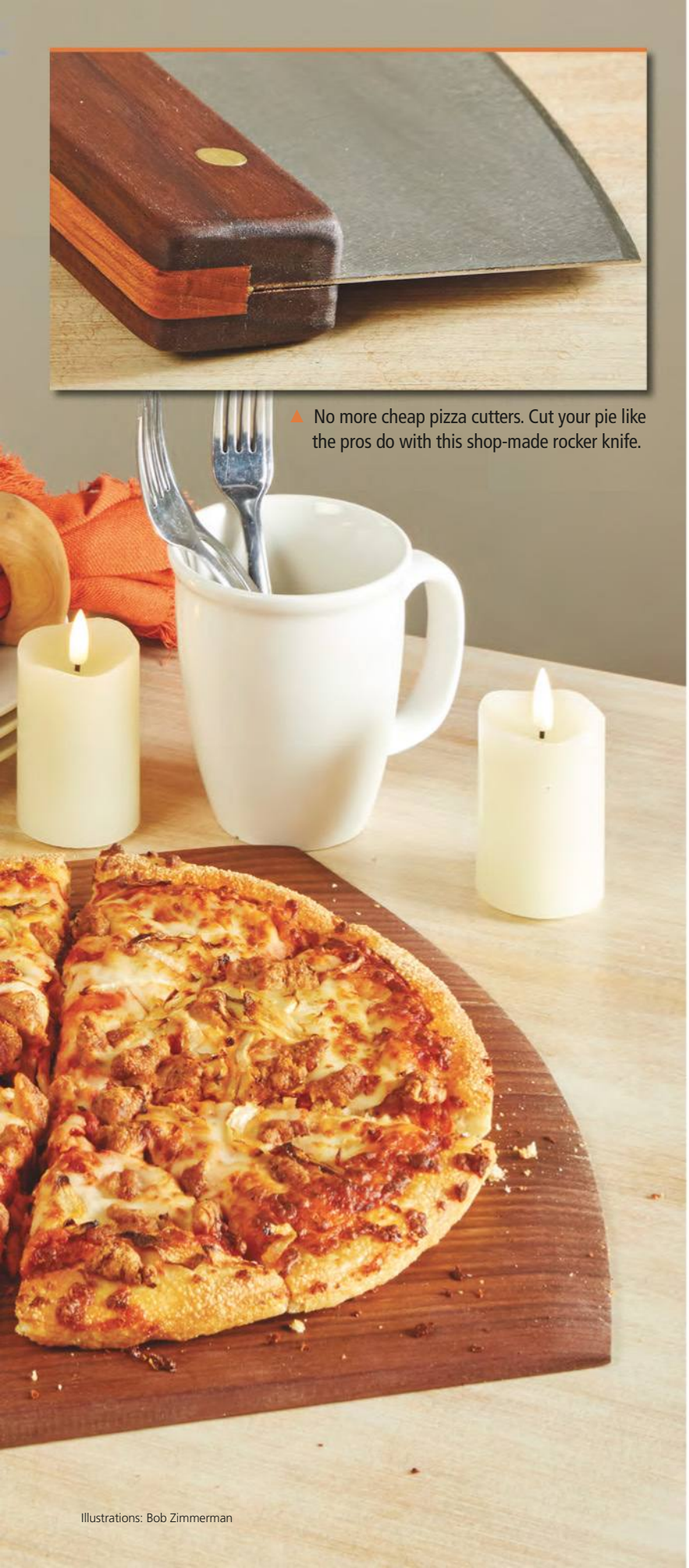

No more cheap pizza cutters. Cut your pie like the pros do with this shop-made rocker knife.

Pizza Peel & Rocker Knife

This combo of simple kitchen tools make it a lot easier to enjoy the classic comfort food we all love — pizza.

The scenario (in black and white) is similar across the land: the oven beeps and a juggling act ensues. With oven mitts, a spatula, and a cookie sheet gathered on top of the stove, you open the oven door and rattle the rack out. You grope for the cookie sheet with the mitted hand and grab the spatula with the other. From the back side of the pizza the spatula's task is to coax the pie towards the cookie sheet without it sliding past the sheet straight to the floor. Who needs this?

Imagine, if you will, another time and place (in living color) the chime goes off on the oven and you glide into the kitchen picking up the peel as you open the oven door. After you release the front edge and slip the wonderful new tool under that bubbling dinner, you transfer it to the island to cool. A few moments later you pick up the peel's partner, the rocker knife (inset photo), and with four rolls around the pizza — dinner is ready.

Have I sold you yet? The peel you see here is made of walnut and has a cherry handle laminated to the top to add stiffness and a little visual contrast. The rocker knife has a stainless steel blade that you'll rivet to a walnut and cherry handle. It's not a complex project, but it will be loved, so you might want to make several for the sake of gift-giving.

Illustrations: Bob Zimmerman

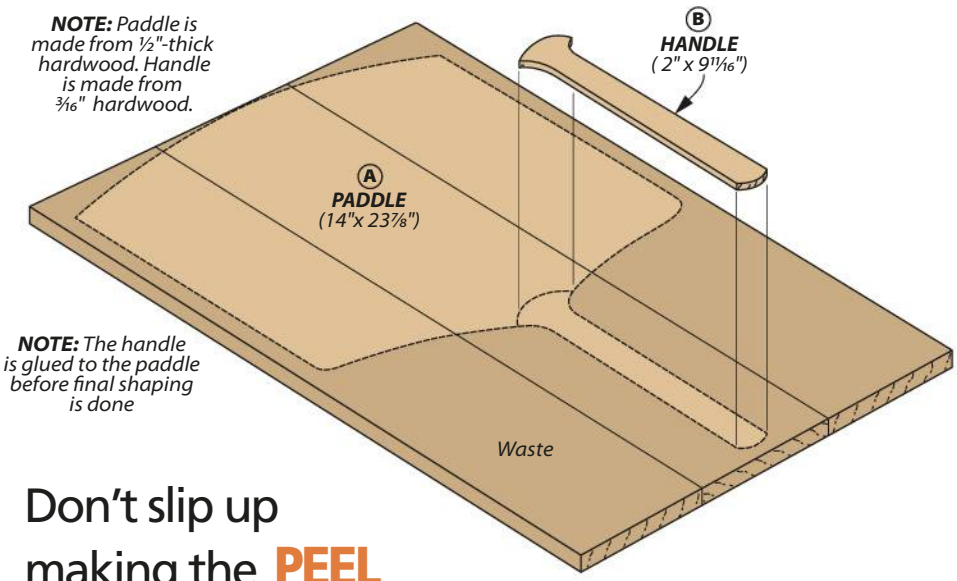

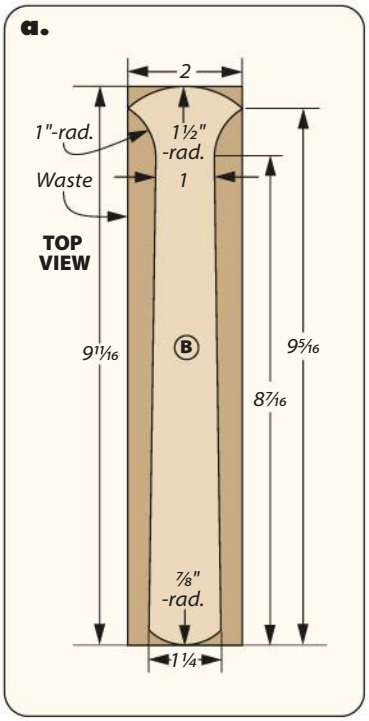

Don't slip up making the PEEL

The qualities of a perfect pizza peel are fairly simple — the paddle needs to be lightweight, flat, and sturdy. The drawing above shows you what we came up with to address those needs.

Making the paddle ½" thick keeps the paddle nice and light, but you've probably noticed that the width of the paddle is wider than most planers. We'll defer to your craftiness on how you get the blanks to final thickness. To aid in keeping the paddle flat it's best to use quartersawn walnut.

To tick the "sturdy" box on the list you'll add the cherry handle to the paddle that you see in detail 'a.' Start the project by gluing up the boards. So as not to defeat the reason you used quartersawn material, make sure that the three boards stay flat during this step. Don't clamp the boards so tight that they curl.

A BIG TAPER. A long taper from the nose of the paddle to just below the handle will aid in sliding the pizza onto the peel. The tapering jig you see in the box below shows the steps needed to create that surface on the paddle.

To prepare for the tapering process, trim the blank to its final size and lay out the shape of the paddle on the blank. Detail 'b' on the next page provides you the dimensions of the paddle profile. Let's look at the jig for a moment.

The parts of the jig are shown in Figure 1. The most critical

TAPERING THE PEEL

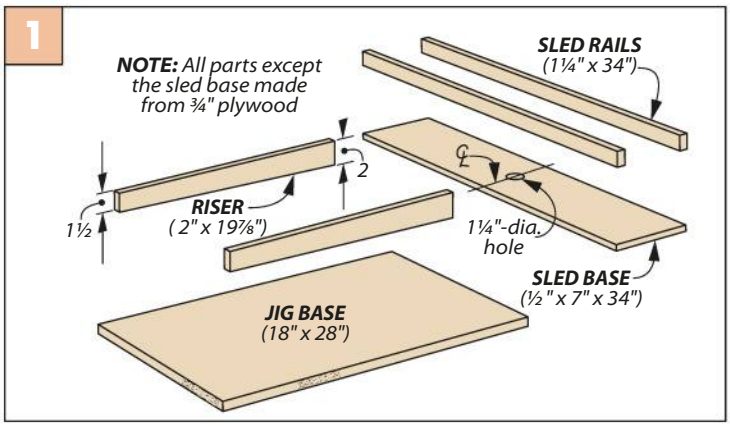

The Jig Parts. The jig that's used to make the taper on the paddle blank can be made from the scraps in your lumber bin. You want the sled rails thick enough to prevent the base from flexing.

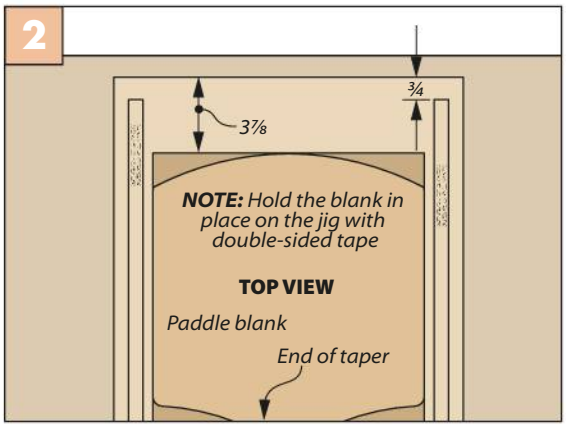

Position the Paddle Blank. The paddle taper we made extends up the paddle to the point of almost touching the handle.

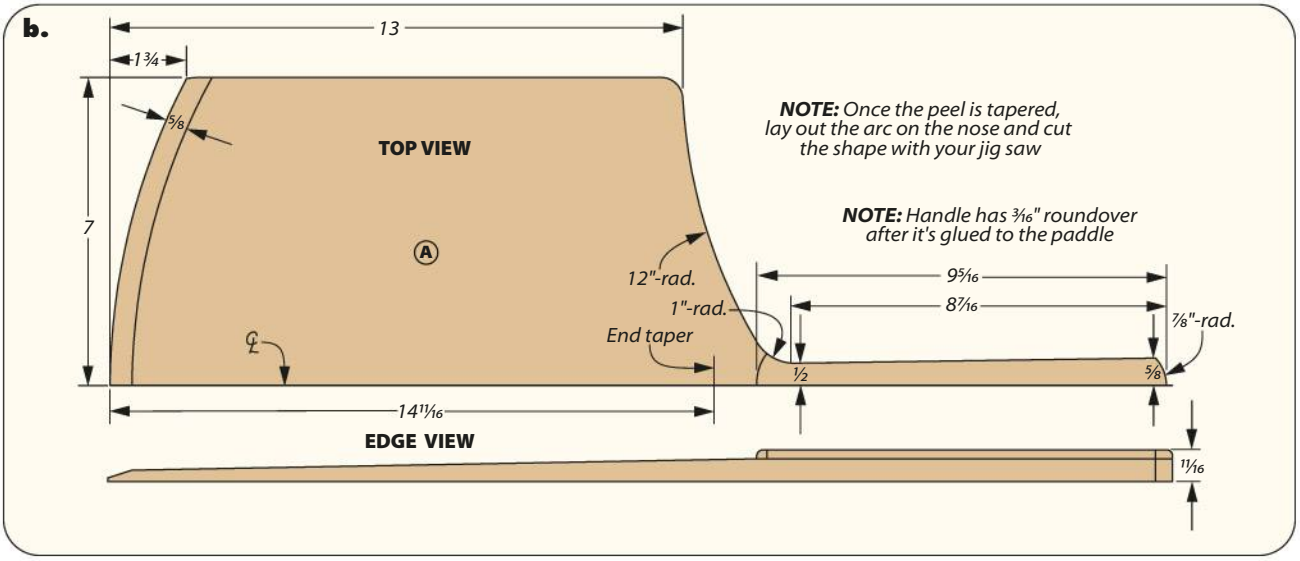

elements of the jig are the rails that are attached to the sled. The rails need to be wide enough to prevent the sled from flexing. So don't skimp on the width of these pieces. Figure 2 shows where to position the paddle blank on the base of the jig. Double-sided tape holds it in place for the next step.

You can remove the waste in sections like you see in Figure 3, or slide the sled back and forth along the length of the paddle. Either way, you'll probably have to sand out bit marks afterwards.

Now you can cut out the paddle profile at the band saw, staying to the waste side of the line. Before sanding the edges, it's time to add the handle.

CHERRY ON TOP. The cherry handle adds some rigidity and good looks to the peel. Detail 'a' on the previous page has the dimensions and other information needed to make the handle.

You can round over the tongue-like front edge of the handle, but leave the sides and back rough until you've glued it to the top of the paddle — that's the next step. After the glue has dried, sand smooth the joint between the paddle and handle. Follow this up with sanding the sides of the paddle and easing the edges. With that task done all that's left to do on the peel is bevel the front edge.

THE BEVEL. A bevel on the front edge of the paddle lets you slide the peel with ease under the pizza. Figure 4 shows how to create this with a block plane. To prevent splitting, Figure 4a shows the lip that you'll want to leave on the edge of the paddle.

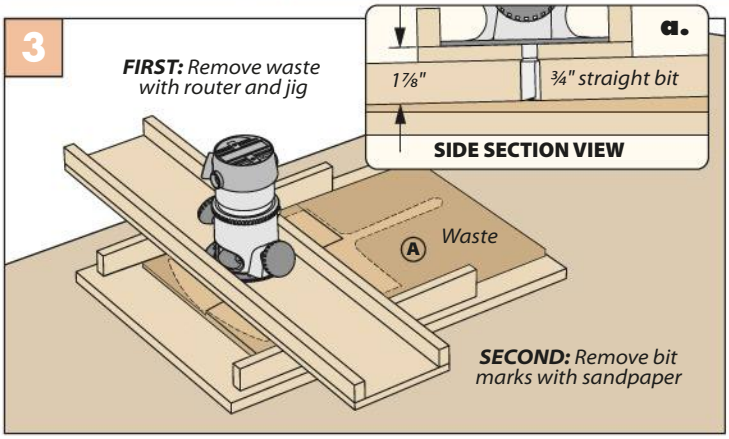

Taper It. Starting at what will be the nose of the paddle, remove the waste by sliding the sled across the risers. Sand the paddle surface smooth when you're done routing.

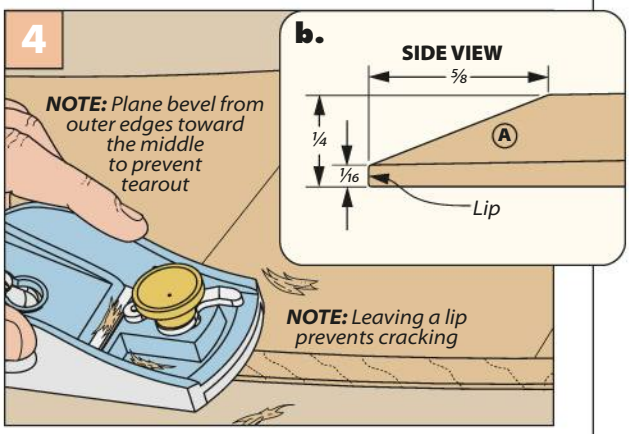

Bevel the Edge. A block plane is the ideal tool to use when making the bevel on the nose of the paddle. The bevel follows the arc of the nose.

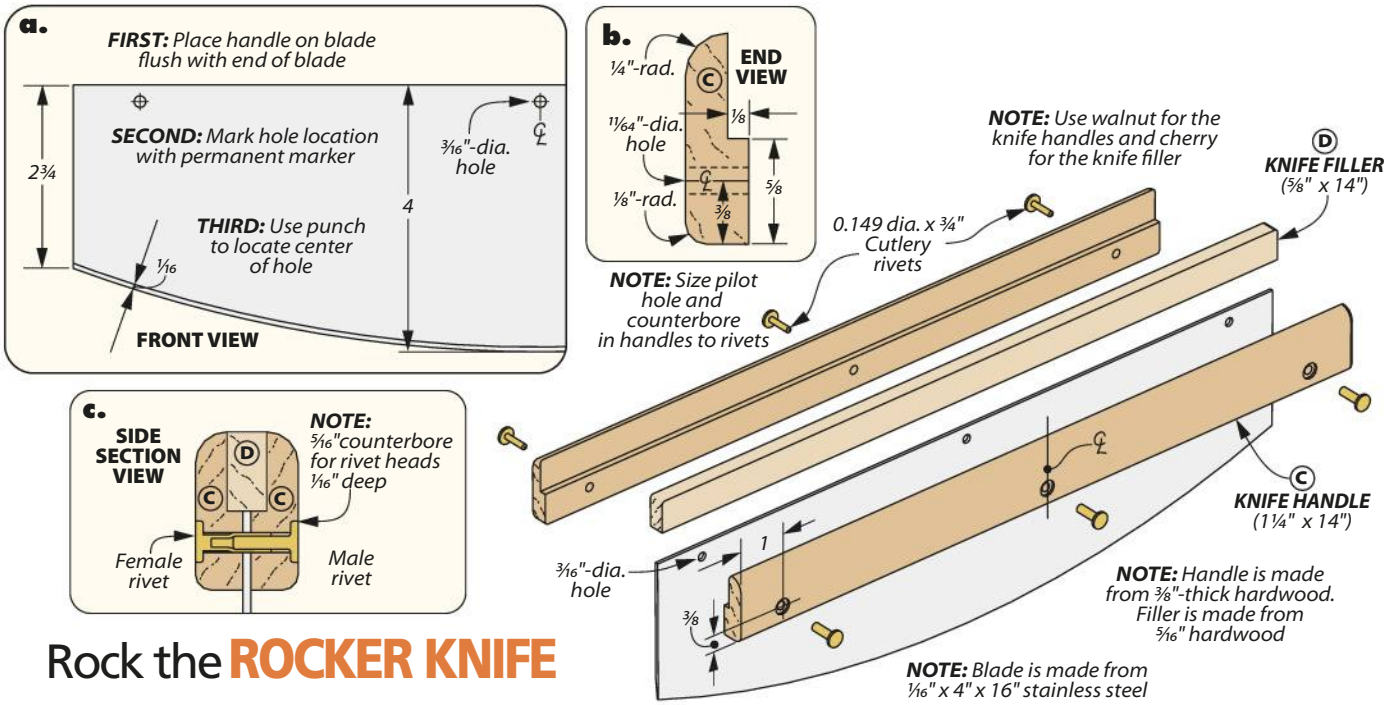

Rock the ROCKER KNIFE

Now it's time to tackle the pizza peel's partner — the rocker knife. The knife you see here is designed similarly to the knife professional pizza parlors use day in and day out. The long handle makes the knife simple and safe to use. Let's start there.

Making the parts for the handle requires some strategic planning. As you see in the main drawing and details above the handle is made from two long pieces and a filler that trap the blade of the knife. Starting at the table saw with a piece that's longer than the length of the two handles, cut a rabbet along one edge (detail 'b').

SIZE THE FILLER. The thickness of the filler is determined by clamping together a dry assembly of the handles and the stainless steel sheet you'll be using for the blade. It should be close to the dimensions given in the main drawing above. But if your blade thickness varies, the dry assembly will reveal the proper thickness of the filler.

After cutting the filler to size, glue the filler to the handle pieces. Make sure to clean the glue out of the slot that holds the blade. Then you'll need to round the edges of the handle.

CRAFTING THE BLADE

The initial shape of the blade for the rocker knife is easily cut with an angle grinder and a cutoff blade. The steps here will show you the way. There's one thing to do before you fire up the grinder.

Layout First. Use a permanent marker with a medium-fine point to draw the arc on the blade. Once you've made the initial cut shown in Figure 1, you need to smooth and square the rough results on the edge of the blade.

Rock & Roll. To judge and fine-tune the arc of the blade, stand the sheet on edge and rock it in the same manner you would while using it to cut pizza. Take note of where the blade bumps on the surface of the bench and file the edge accordingly. Repeat this step until the blade rolls smoothly back and forth across the surface.

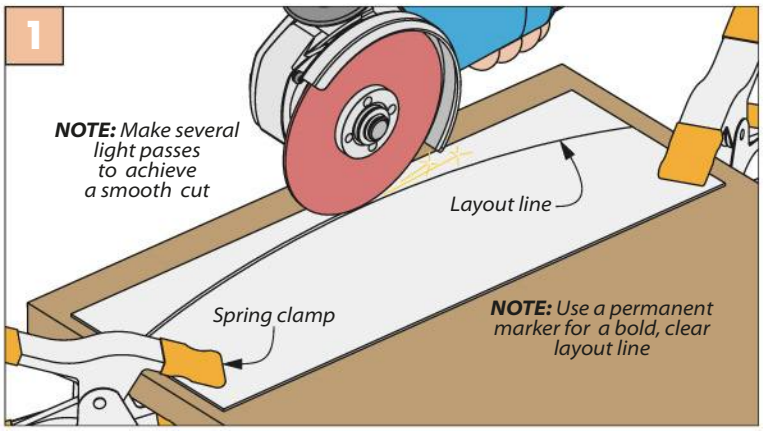

Cut the Curve. Safety is important while cutting the stainless steel sheet that will become the blade for the rocker knife. Spring clamps hold the sheet firmly in place while you define the edge with a grinder.

RIVET HOLES. At the drill press, drill the counter bore with a Forstner bit on one side of the handle. Then drill the through hole. Now drill the counterbore on the other side of the handle.

Next, use the handle to mark the hole locations on the blade (detail 'a'). This way the handle and blade are flush to each other. Use a punch to make a starting point for the drill bit. A sharp split-point drill bit that's a little oversized is what's needed to drill the hole. You don't want the hole to restrict the rivets from flaring when you're attaching the blade. Next up is shaping the business end of the blade.

THE KNIFE BLADE

This project is going to wrap up with having some fun with a little bit more metalworking. It starts with making the long, smooth arc that is the cutting edge of the blade. Figure 1 below shows how to create the arc of the cutting edge with a grinder and cutoff wheel.

Figure 2 is sharpening the edge. Figure 2a shows you what kind of edge you need to cut pizza — there's no need to drag out the waterstones here.

The stuff you need to rivet the blade to the handle is shown in the photos to the right. A thick steel plate or a vise anvil will absorb the dead-blows of the hammer while you drive the rivets together (Figure 3). It's important to hit the head of the rivet flat and square at the same time to prevent the rivet from deforming. The peel and knife handle can be finished with butcher block oil if you desire. And if you're curious, I'll have sausage, pepperoni, and mushrooms on that first pizza. W

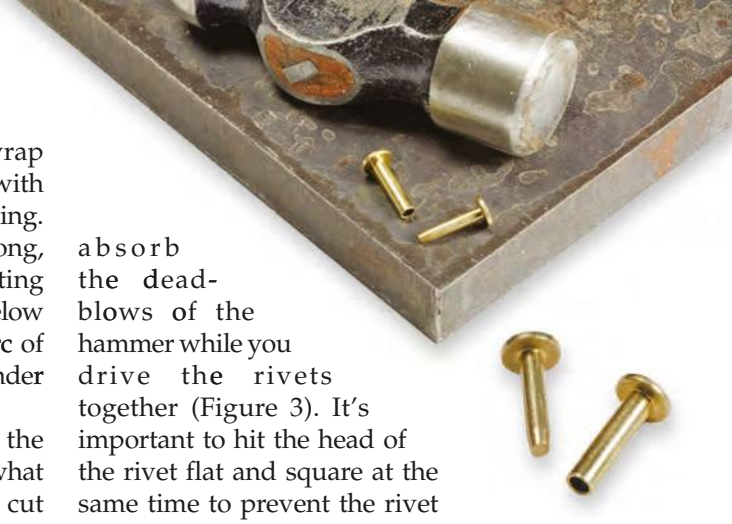

▲ Cutlery rivets come in pairs, male and female, and are designed to take abuse in the kitchen.

Materials, Supplies & Cutting Diagram

A	Paddle (1)	1/2 x 14 - 23 7/8	**D**	Knife Filler (1)	5/16 x 5/8 - 14
B	Handle (1)	3/16 x 2 - 9 11/16	•	1/16" x 4"-14" Stainless Steel Sheet	
C	Knife Handles (2)	3/8 x 1 1/4 - 14	•	(3) 1/2"x 0.149 dia. Press-Fit Rivets	

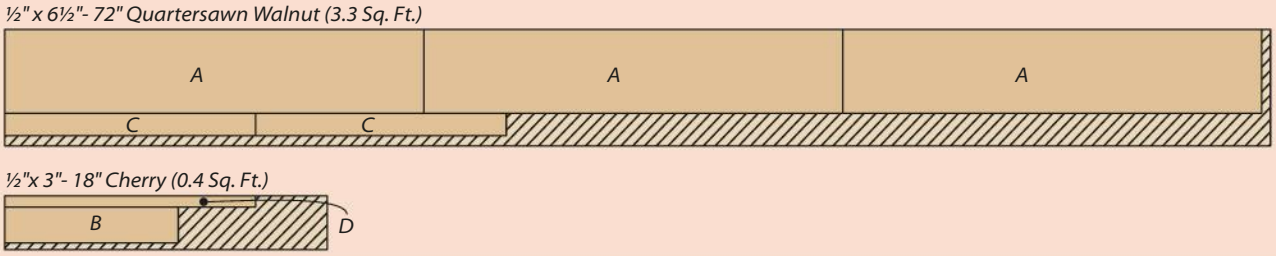

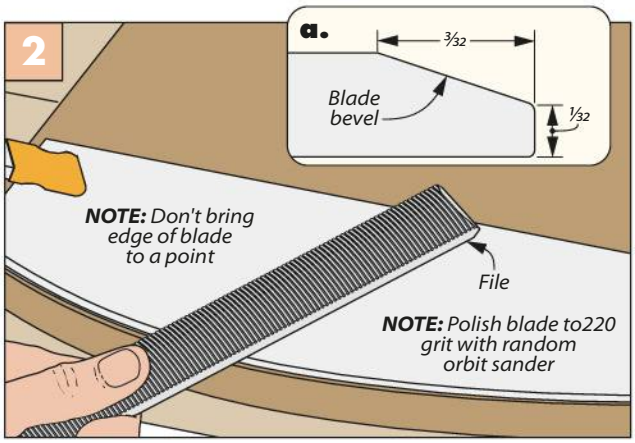

Making a Cutting Edge. The blade of the knife shouldn't be knife-sharp. A good file and a little patience is all that's required to create an edge that will cut pizza.

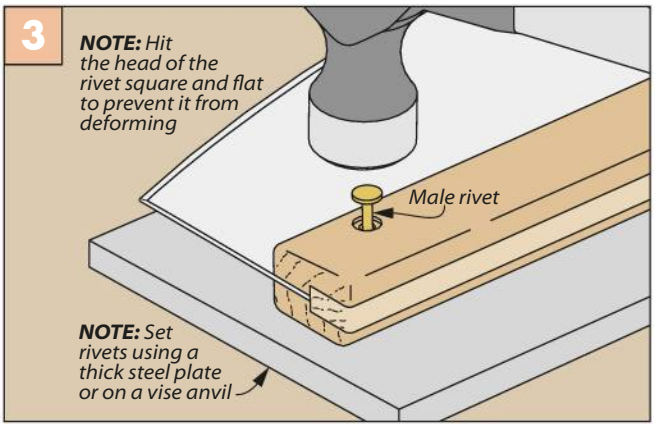

Rivets Come Last. Each rivet will lock the handle to the blade. Once they're in place a light sanding will remove any marks that remain from joining them to the handle.

Nomad Cabinets

If you're redecorating the home or moving to a whole new one, these cabinets are easy to move, change, and re-arrange along with you.

The idea of "*nomad*" furniture isn't a new one. From the original British campaign furniture to the swelling popularity of ready-to-assemble furniture of the last few decades, there's long been a desire to have quality furniture that's also easy to move when the need arises. Unfortunately, as woodworkers are keenly aware, quality and portability rarely cross paths when it comes to funishings. These nomad cabinets were designed for both.

BARRISTER CASES. If you're anything like myself, the first thing that caught your eye on these cabinets is the barrister door on the upper bookcase. It's a unique design taken from, as the name implies, lawyers who would travel on a circuit with a judge's court. The lawyers (or barristers) needed a way to move all their books safely and without too much hassle. Their answer was close to what you see here: a handled case with a sturdy door that slides out of the way when not needed. This design serves as a nice complement to the rolling, door-and-drawer storage chest below it.

MODULAR PIECES. One of the key elements in designing these *nomad* cabinets was to make them not only easy to move where you want them, but easy to arrange them how you want once you arrrive. The radiused and cut out sides allow the chest and case to interlock, and the handles and draw latches make attaching and releasing them easy. The designs here are for one storage chest and one barrister bookcase, but their modular nature means you can make these cabinets à la carte.

▲ The bookcase and chest have a modular design — they can be rearranged in any manner that suits your needs or your whims.

▼ The barrister door (upper cabinet) opens up and slides back to reveal the bookcase's contents, while the doors and drawer offer additional storage (lower cabinet).

Written by: Rob Petrie; Project Design: Dillon Baker

Illustrations: Dirk Ver Steeg

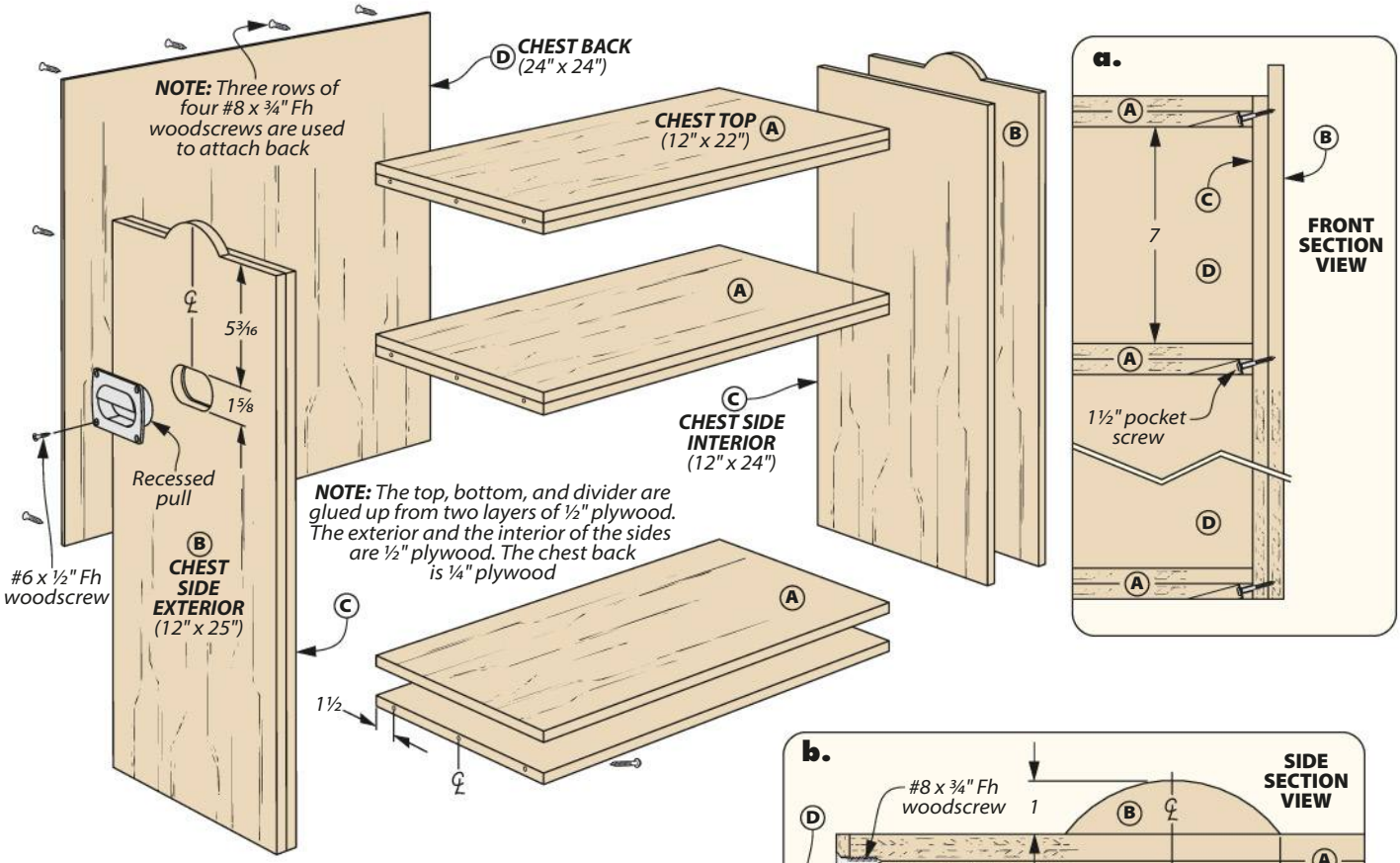

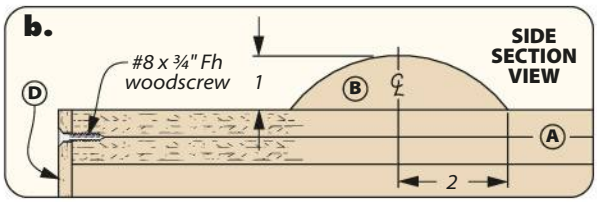

Storage CHEST

The first piece of the nomad cabinets we'll build is the storage chest. This chest features a drawer and set of doors to house larger items within. The case is comprised of a top, bottom, and divider, as well as interlocking side panels, joined by butt joints and pocket screws (detail 'a').

HANDLE RECESS

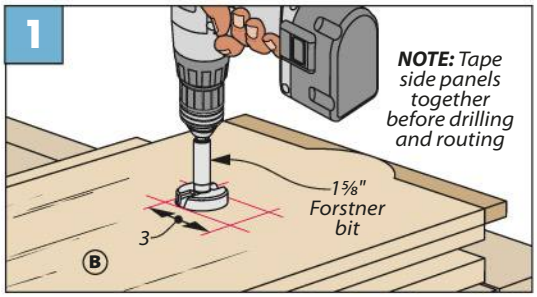

Making Room. Tape the exterior and interior side panels together. Drill out most of the waste with a 1⅝" Forstner, then flush trim the recess.

THE HORIZONTALS. The top, bottom, and divider of the chest are all glued up from two Baltic birch panels. There's nothing complex starting off here — once the panels dry, cut them to size and set them aside until assembly.

SIDES. Since the cases will be stacked on each other, cutting the sides for all cases from the same piece of plywood will give the cabinets a more continuous look. Additionally, I cut all the side pieces to size at this point. It'll be much easier to make sure the pieces interlock correctly before assembling the cases.

The sides are glued up from two panels. However, the exterior panels will need to be shaped before they can be glued up. Cut the exterior panels 1" longer than the interior panels — this extra inch is radiused in the center to fit cutouts at the sides' bottom, allowing the cases to interlock when stacked (detail 'b' above).

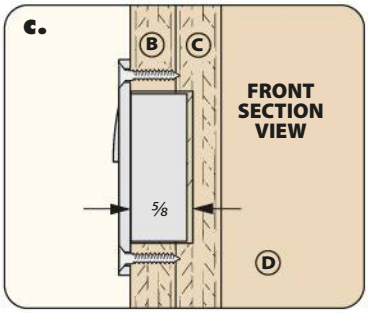

Using the patterns provided at *Woodsmith.com/266*, make a template to locate the handle recesses and shape the sides.

HANDLES. First, you'll need to room for the handles. After attaching the template to the exterior side, tape the matching side pieces together and use a Forstner bit to drill out most of the waste (Figure 1). Follow that up by routing the remaining waste back to the template with a flush-trim bit.

RADIUS & CUTOUT. Separate the side panels. Clamp down the exterior panel, then use a jig saw to

INTERLOCKING SIDE PANELS

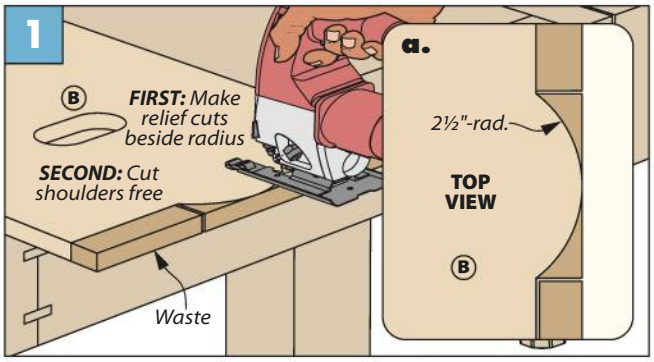

Remove the Shoulders. After using the template to lay out the side panel's shape, remove the waste with a jig saw.

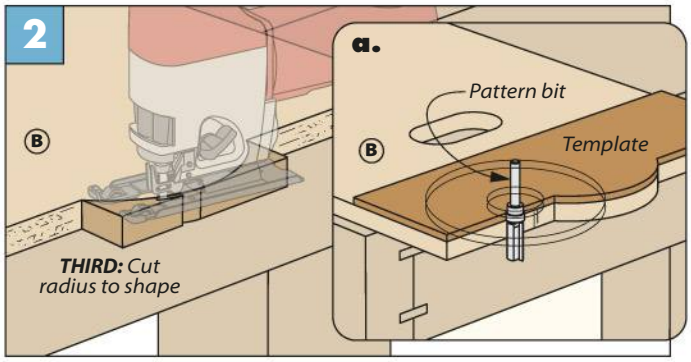

Interlocking Arches. Cut the radius to shape. Use the template and a pattern bit to shape the edge edge.

begin shaping the radius. Start by making relief cuts beside the radius, then cut off the shoulders on either side (Figure 1). Cut the radius to shape, staying outside the template (Figure 2) and finish shaping with a pattern bit and router (Figure 2a).

Now it's time to glue up the side panels. After they've dried, test fit the sides together and refine the shape by sanding or filing as necessary.

BACK PANEL. One piece remains on the storage chest: the back panel. Cut this to size, then get your drill and driver ready.

ASSEMBLY. As I mentioned, the sides are joined to the top, bottom, and divider by butt joints and pocket screws. Secure these pieces together, then attach the back panel with woodscrews. To finish up the case, screw the handles into their recesses.

ROLLING PLATFORM

The cabinets sit on a platform mounted with casters, making them easy to move as needed, whether it's across the room or to a new home entirely. As you can see in the photo on page 35, we used the storage chest as the base for our project, but the barrister case detailed later would work just as well.

PLATFORM. The rolling platform itself is glued up from two panels of Baltic birch, just as with the sides and horizontals of the chest. After the initial glueup, cut the platform to size.

MOUNTING. Screw the casters on to complete the rolling platform. There's still some time to decide which cabinet will be your base, as we'll need a drawer and doors to fill out the storage chest, and that's before moving onto the barrister bookcase.

GO Online Extras

For full-sized patterns for this project, go to:

Woodsmith.com/266

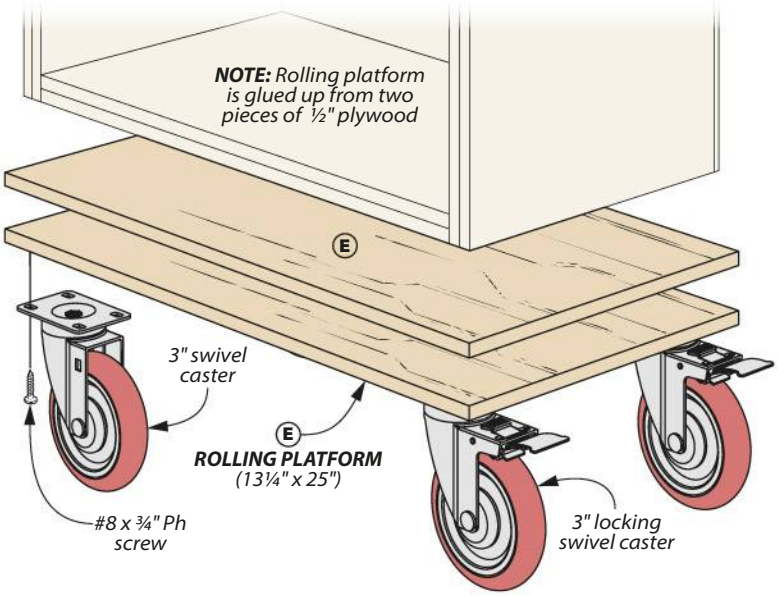

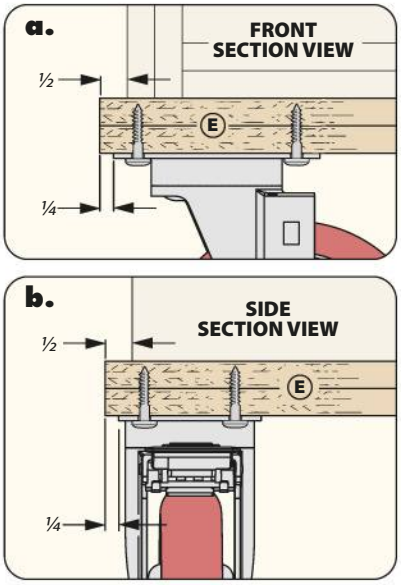

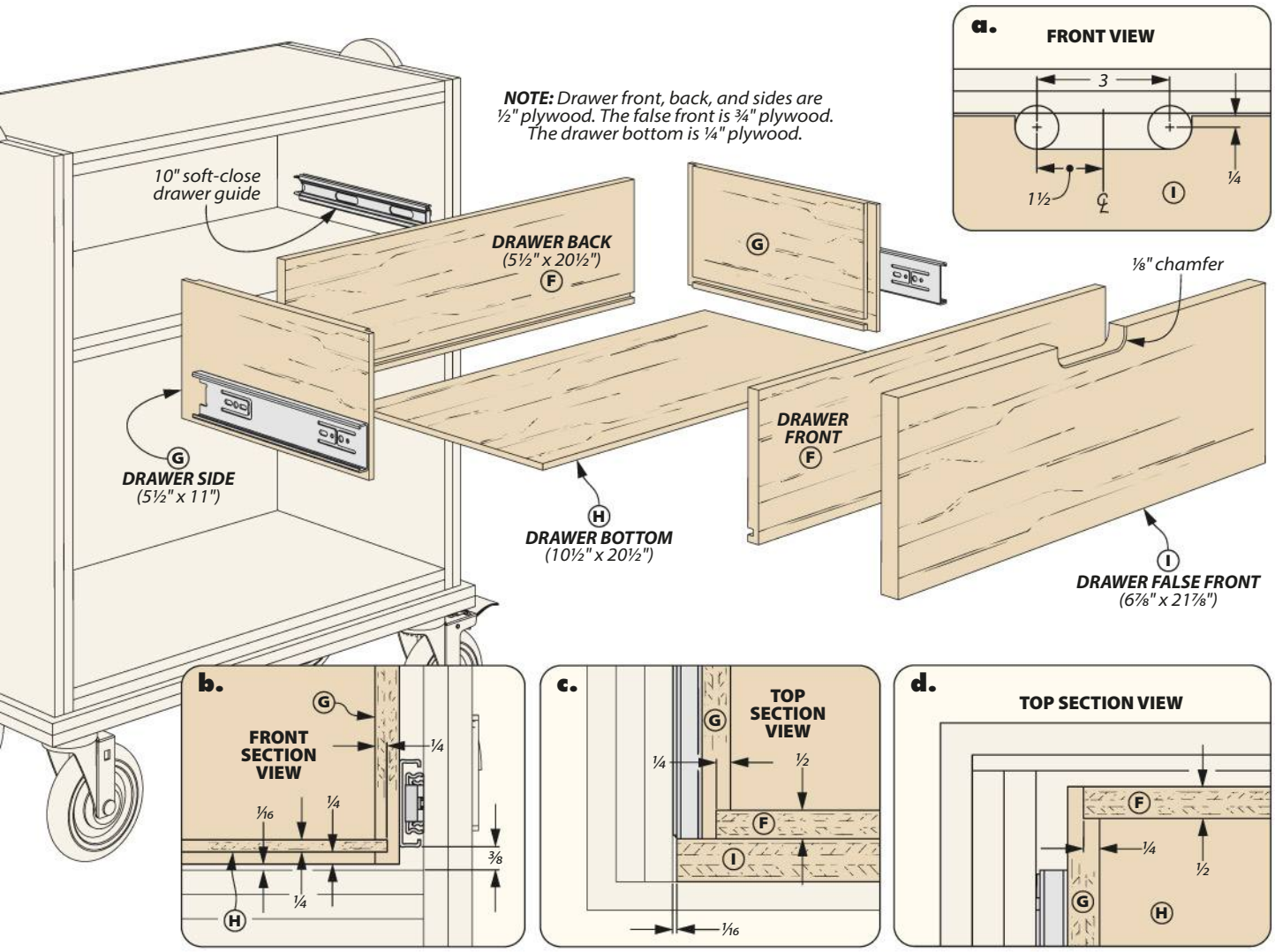

A Drawer **ABOVE**

The chest provides two means of storage: a drawer above and a pair of doors enclosing the lower portion of the chest. The drawer runs on guides while the doors are hung using inset hinges.

FRONT & BACK. For a change of pace, the drawer pieces are each just one layer of ¾" plywood, so simply cut them to size and get to work. Cut the front and back pieces first, then set them aside. Grooves will need cut in their bottoms, but it's best done along with the side pieces.

SIDES. Cut the drawer sides to size, then head to the table saw. To cut the rabbets for the front and back pieces, bury a dado blade in an auxiliary fence and use your miter gauge to help make the cut (Figure 1, next page). Next, use a narrower dado stack to cut the groove for the drawer bottom on the front, back, and side pieces.

BOTTOM PANEL. The bottom panel is a thin piece of Baltic birch. Cut it to size, then set it aside until assembling the drawer.

FALSE FRONT. After cutting the false front to size, print out the pattern provided at *Woodsmith.com/266*. Use the pattern to make a template to help you shape the pull cutouts (detail 'a' above). This template will serve not only here, but also on the pull cutouts on both kinds of doors later. The only difference is that the cutouts on the lower doors are slightly shallower than the ones on the false front and barrister door.

Remove most of the waste at the band saw, then flush trim the remaining waste to the template. Remove the template and rout a chamfer along the edges of the cutout for a comfortable grip.

GLUEUP & INSTALLATION. With all the pieces shaped, you're ready for assembly. Glue up the drawer pieces, with the bottom fit in its grooves and the front and back fitting in the rabbeted ends of the side pieces.

DRAWER JOINERY

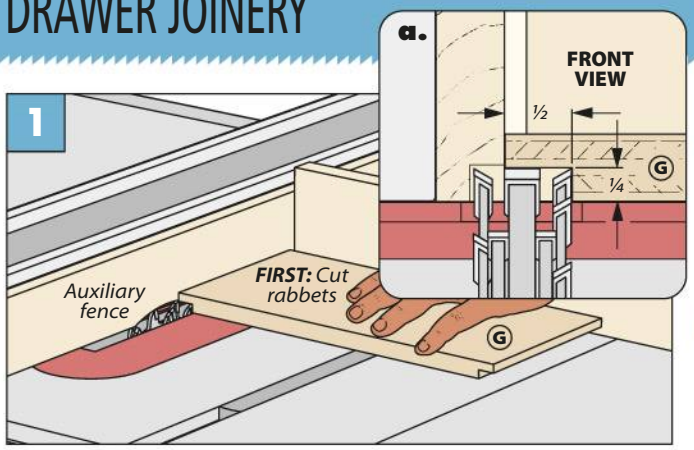

Side Rabbets. At the table saw, bury a dado blade in an auxiliary fence and cut the rabbets in the drawer sides.

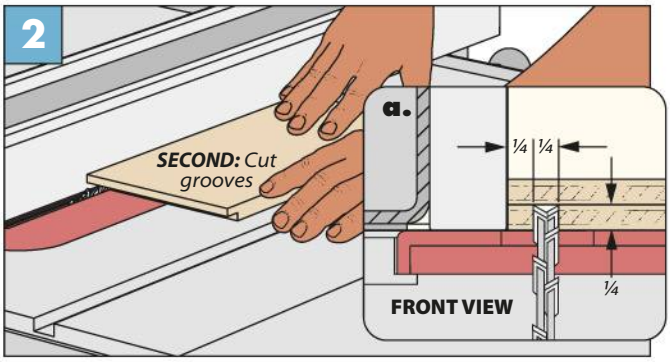

Bottom Groove. Narrow the dado stack, then cut a groove in the front, back, and sides for the bottom panel.

When the glue is dry, screw on the false front, driving the screws through the drawer fronts. Finally, install the drawer via its guides (detail 'b,' previous page).

DOORS BELOW

The doors that close off the lower part of the storage chest, are held shut by a door catch with pair of rare-earth magnets inset within it. Additionally, the doors feature chamfered pull cutouts to match the drawer's false front.

SIZE & SHAPE. Start off by cutting the doors to size. Next, attach the template you used for the false front to the door, centered on the side (these cutouts are ¼" shallower). Jig saw most of the waste free, then flush-trim rout the pull cutouts to shape, then swap out for a chamfer bit to chamfer both edges of the cut-out. Lastly, drill out the mortises for the inset hinges (detail 'b').

DOOR CATCH. Before cutting the door catch to size, lay out its shape and the location of the magnet recesses on an over-sized blank. Drill the recesses and cut the catch to size.

INSTALLATION. Screw the strike plate for the magnets onto the doors. Install the doors via the hinges, aiming for a 1/16" gap around. Glue the magnets into their recesses on the catch then position the catch, being sure to account for the thickness of the strike plate (detail 'a'). Finally, screw it in place.

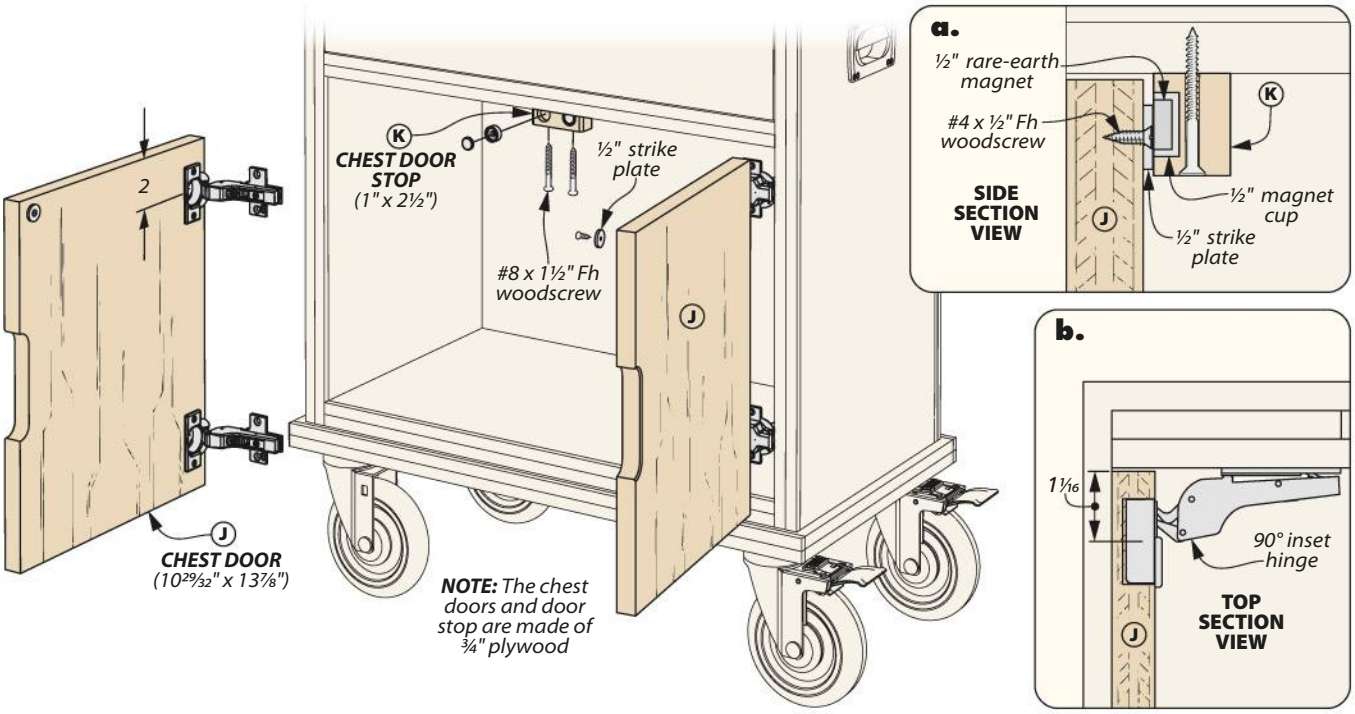

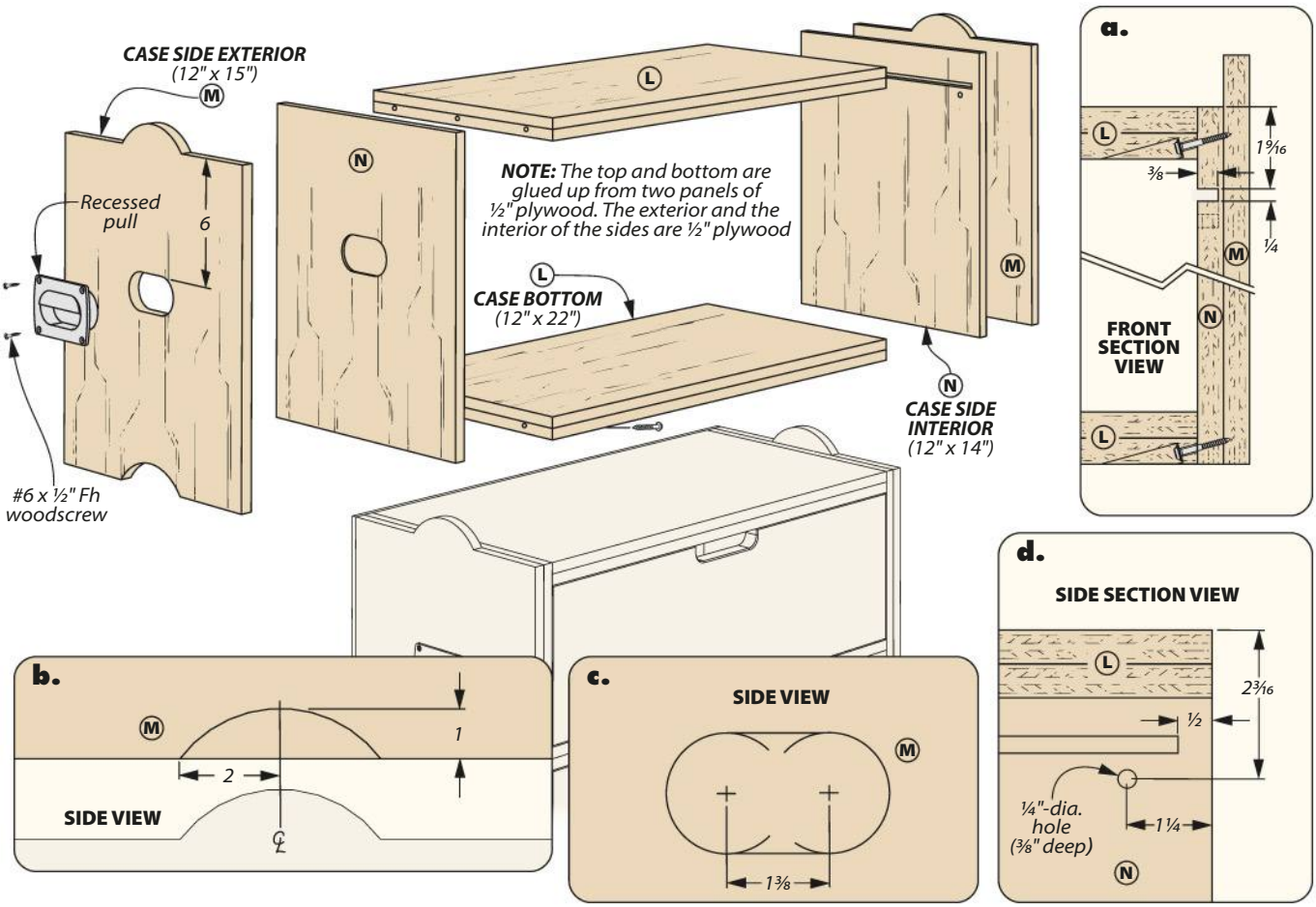

Barrister **BOOKCASE**

The main feature of the barrister bookcase is the eponymous barrister door. For those unfamiliar, a barrister door is one that flips up and slides back under the top of a case — a sort of cabinetry garage door. In addition to this, the barrister bookcase has sides like the storage chest, with recessed handles for easy carrying and interlocking sides to fit with the other nomad components.

STOPPED DADO

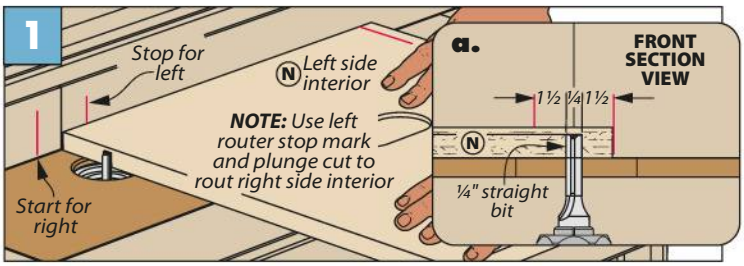

Barrister Dado. A stopped dado in the interior side panel gives the barrister door a slot to ride in. Rout this dado in several passes.

TOP & BOTTOM. The top and bottom of the barrister case are glued up from two pieces of Baltic birch, just as with the main case. Once glued, cut them to size and set them aside until assembly.

SIDES. Since the exterior panels are already shaped (assuming you made them along with the chest's sides), there's only one bit of work to do on them before gluing up the case sides. To give the barrister door rails something to slide on, rout stopped dadoes on the inside of each panel with a straight bit, as in Figure 1 at left.

Now the side panels can be glued together. Once they've dried, use the side template and a Forstner bit to bore out most of the waste for the handle recesses, as you did with the chest sides. Rout the rest of the waste out with a flush-trim bit. Lastly, drill out the holes that will accept the stop pins for the barrister door. Cut the pins to length from aluminum rod and epoxy them in.

BARRISTER DOOR

The barrister door is a simple piece. After sizing the door, drill the holes in the edges for the pivot pins. I used a doweling jig here to be sure I was centered

exactly on the piece, as the door's reveal will make any differences obvious after assembly.

Glue the pivot pins in place. Use the template to help you rout the pull cutout, then chamfer the edge.

BACK & STOPS. The last pieces of the barrister case are the back panel and the door stops. First, cut the back panel for the bookcase to size, then set aside until the you get to the assembly.

Begin with the two stops as one oversized blank. Drill the recesses for the rare-earth magnets in the oversized blank (detail 'c'). Glue the magnets in, then size the stops.

FINISHING. It's nearly time to put all the bookcase pieces together. However, because of how the barrister doors fit in place, it's best to finish the pieces individually before assembling any of the case, or getting an even application can get tricky. So, at this point, I applied a few coats of spray lacquer to everything.

ASSEMBLY. The barrister case goes together much like the main case. The sides are joined to the top and bottom by butt joints and secured with pocket screws. Before screwing the back in place however, slide the barrister door into the slots and check the reveal. If it needs adjusting, plane the edges of the door as necessary.

Screw the handles into the handle recesses and attach the draw latches (detail 'd'). I used a simple drilling guide to ensure the holes were placed evenly across each of the sections.

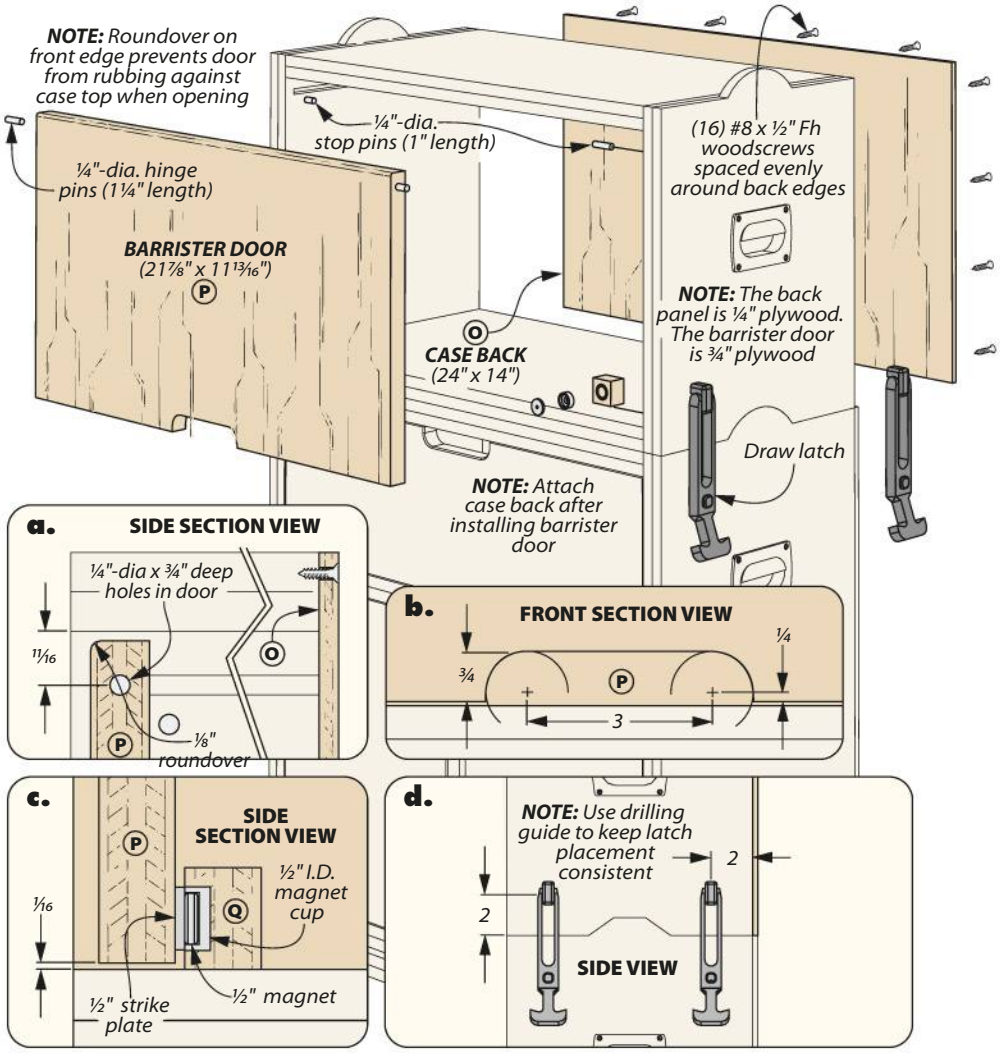

Materials & Supplies

Storage Chest (1)

A	Top/Bottom/Divider (6)	½ ply. - 12 x 22
B	Side Exterior (2)	½ ply. - 12 x 25
C	Side Interior (2)	½ ply. - 12 x 24
D	Back (1)	¼ ply. - 24 x 24
E	Rolling Platform (2)	½ ply. - 13¼ x 25
F	Drwr. Front/Back (2)	½ ply. - 5½ x 20½
G	Drawer Sides (2)	½ ply. - 5½ x 11
H	Drawer Bottom (1)	¼ ply. - 10½ x 20½
I	False Front (1)	¾ ply. - 6⅞ x 21⅞
J	Chest Doors (2)	¾ ply. - 10 29/32 x 13⅞
K	Door Catch (1)	¾ ply. - 1 x 1½

Barrister Case (1)

L	Top/Bottom (4)	½ ply. - 12 x 22
M	Side Exterior (2)	½ ply. - 12 x 15
N	Side Interior (2)	½ ply. - 12 x 14
O	Back (1)	¼ ply. - 24 x 14
P	Barrister Door (1)	¾ ply. - 11 13/16 x 21⅞
Q	Door Stops (2)	¾ ply. - 1 x 1

Storage Chest Hardware (1)

- (18) 1½" Pocket Screws
- (24) #8 x ½" Fh woodscrew
- (16) #8 x ¾" Fh woodscrew
- (2) Recessed Pulls
- (2) Swivel Casters
- (2) Locking Swivel Casters
- (2) ½"-dia. Rare-earth Magnets
- (2) ½"-dia. Magnet Cups
- (2) ½"-dia. Washers
- (2) 10" Soft-close Drawer Slides
- (4) 90° Inset Hinges
- (4) Draw Latches

Barrister Case Hardware (1)

- (1) ¼"-dia. aluminum rod (6" length)
- (12) 1½" Pocket Screws
- (24) #8 x ½" Fh woodscrew
- (2) Recessed Pulls
- (2) ½"-dia. Rare-earth Magnets
- (2) ½"-dia. Magnet Cups
- (2) ½"-dia. Washers

***NEEDED:** Two 48"x 96" sheet of ½" plywood, one 48" x 48" sheet of ¼" plywood, and one 24" x 48" sheet of ¾" plywood*

Written by: Erich Lage; Project Design: Chris Fitch

Newport Tea Table

▼ The corner profiles of the table top harmonize beautifully with the aprons that are joined to the posts of the legs.

▲ There's an article on page 18 that walks you through the process of carving this fantastically feral claw foot.

Illustrations: Dirk Ver Steeg

You'll get to spend some quality quiet time at the bench crafting and carving this delightful period piece.

The table you see here pays homage to the work of a fellow named John Goddard. In the 18th century he had a thriving furniture making business in Newport, Rhode Island. Tea tables prior to this point were more delicate and refined objects. John decided it was time to add some weight and substance to this classic piece of furniture.

He fleshed out the legs and kept the cabriole profile, but replaced the "slipper" feet with the more substantial claw foot you see here. That adjustment won over wealthy patrons that were wanting an earthy elegance to distinguish themselves from the folks on the east side of the pond.

Speaking of the British, Mr. Goddard's company and career were cut short when the English lads decided to take up residence in Newport while trying to corral us pesky subjects in the New World — we all know how that turned out. But the tale has a happy ending nonetheless. Mr. Goddard's tea table sold at auction in 2005 for a "cool" $8 million.

A CARVER'S DREAM. History lessons aside, let's look at our iteration of the tea table. As you see in the main photo, the aprons are the elegant equator of the table. The ribboned ends of the aprons are joined to the leg posts with mortise and tenon joinery. The corners of the top mimic the profile created by the legs and apron (upper photo). Out of the leg posts flows the shapely cabriole legs which pools into the divine beasts that are the claw feet (lower photo). Clearly there's a lot to do, so sharpen those carving tools and get after it.

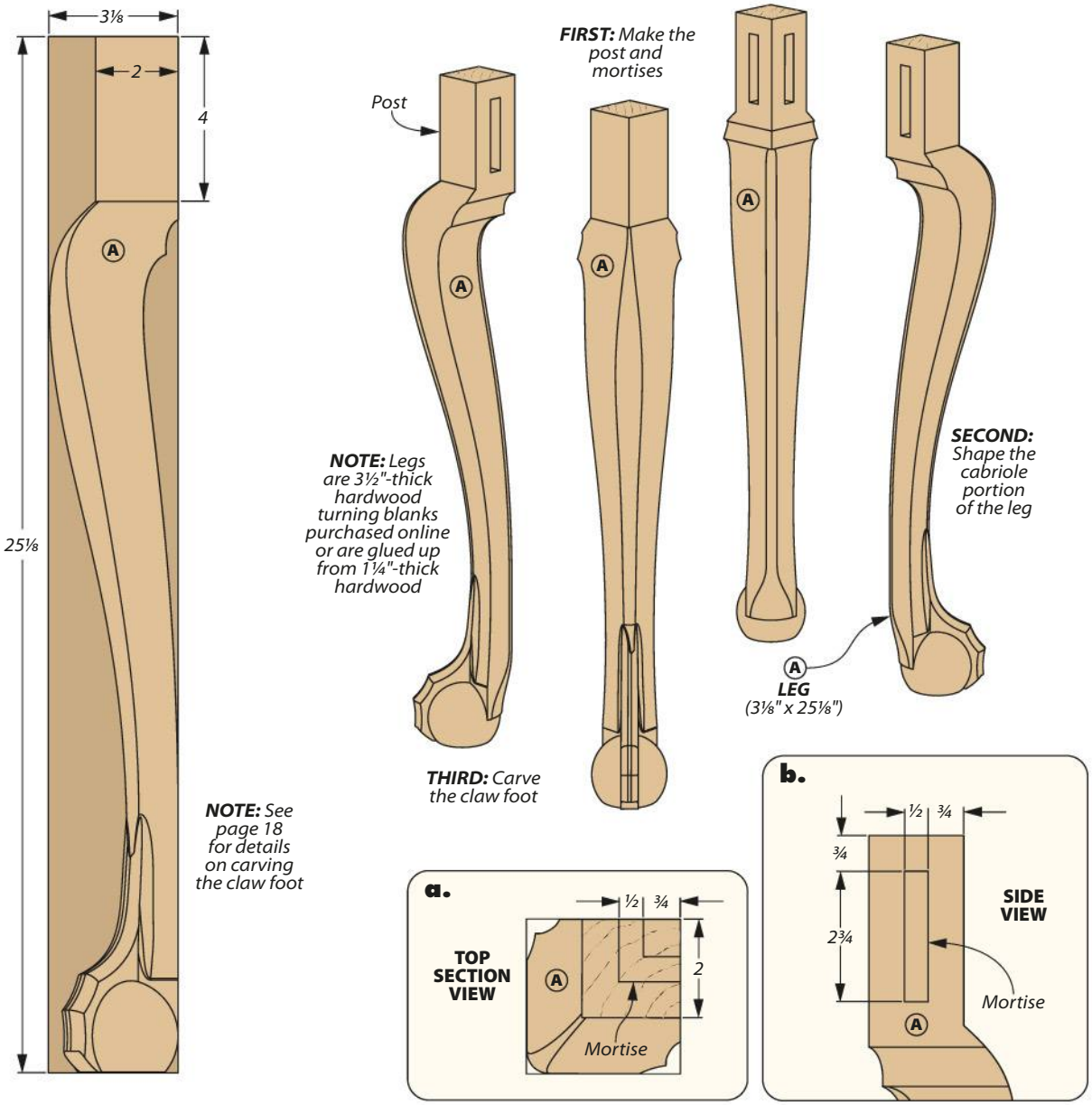

Poring over the **LEGS**

As the drawings above reveal, there's a lot of work to do on the legs of this table — it's all fun work for sure, but work just the same. To make this task manageable we've broken it down into two parts: the upper and lower section. Let's look at both briefly.

UPPER SECTION. The upper section consists of the post, knee, and leg. The post is the square at the top of the leg with mortises that tie into the aprons. The knee and leg are a traditional cabriole design, which is the launching point of the sculptural part of the leg that culminates in the lower section — the claw foot.

LOWER SECTION. I think you'll agree that the claw foot is a project all to itself. To give it the proper attention, we'll cover that in detail on page 18. Patterns for templates for the complete leg are available at *Woodsmith.com/266*. With all that said, let's tackle the upper section of the leg.

By the way, using solid turning blanks for the legs removes any concerns about glue lines affecting the look of the leg. Sources on page 66 will send you in the right direction for quality turning blanks. In case you want to glue up blanks for the legs, we've included that information in the cutting diagram on page 49 at the end of the project.

TEMPLATE. After assembling the pattern you'll need to trace it onto a reusable template made out of hardboard or plywood. Don't hurry this step, the template is the guide that shapes all

GO Online Extras

For all the patterns needed to create the Tea Table, go to: Woodsmith.com/266

facets of the leg, so you want it to be perfect. Speaking of perfection, I want to chat a moment about just that subject in relation to the organic ordeal of shaping and carving at this level. Be patient. Prudent patience would suggest that you might want to carve a practice leg. The confidence you'll gain from doing a dry run on a chunk of wood is well worth the time invested.

MORTISES NEXT. Either way, the next step is to cut the mortises in the leg blanks like you see in Figure 1 below. The dimensions for the mortises are in details 'a' and 'b' on the previous page.

Figure 2 shows how to trace the shape on adjacent faces of the blanks. The template will line up on the blank like you see in the elevation drawing on the previous page. Next you need to define the post at the top of the leg (Figure 3), and cut the post shape free (Figure 4).

The steps below walk you through creating the cabriole section of the leg. In Figure 5 you're cutting the sweeping arc that travels from the knee to the ankle of the legs. In Figure 6 you're smoothing the leg contour with a rasp and file. With that done, you can focus on the feet.

SHAPING THE UPPER PARTS OF LEGS

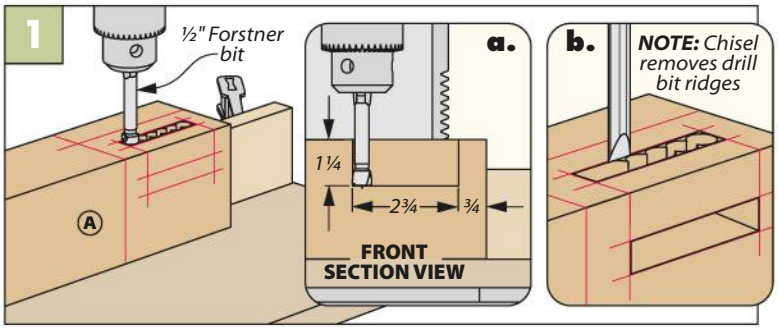

Mortises First. A Forstner bit chucked into your drill press makes quick work of the mortises. Use a sharp chisel to square the corners.

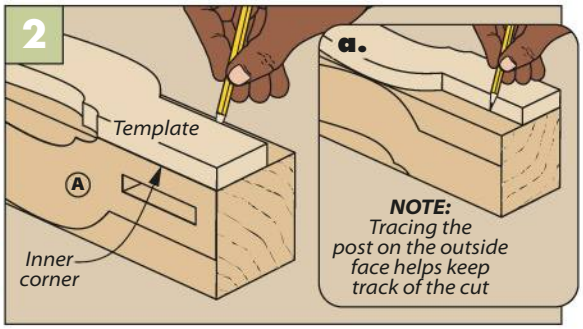

Tracing the Template. The inside corner of the leg blank is where you position the template.

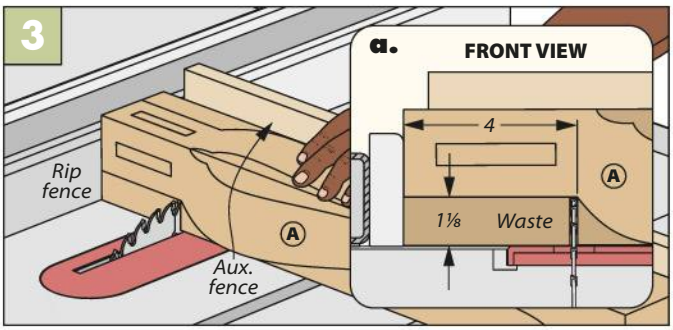

Define the Shoulder. Your miter gauge supports the legs as you make the crosscut that separates the shoulder and knee.

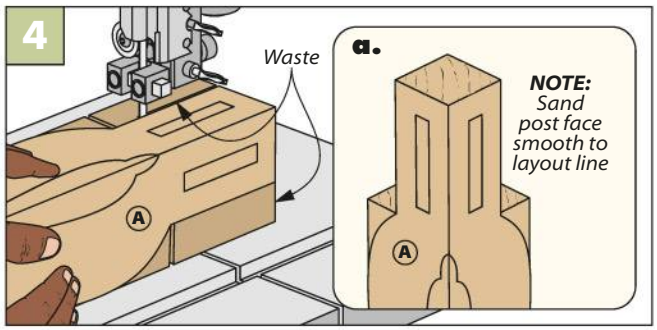

Removing Waste. To create the post, cut from the top of the blank to the shoulder of the leg at the band saw.

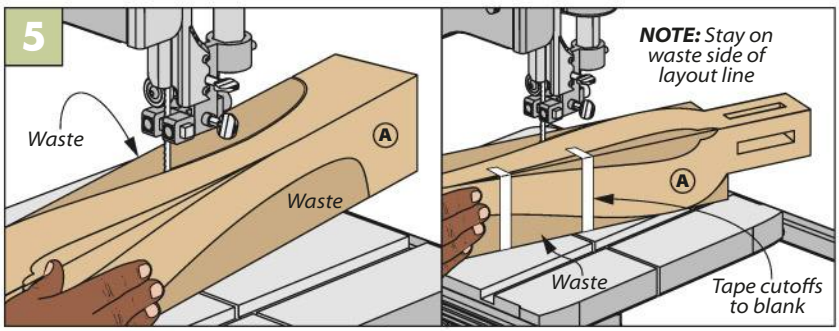

Cut the Sweeps. Cut the profile on one face of the leg. Then tape the waste back in place to support the leg while making the other cut.

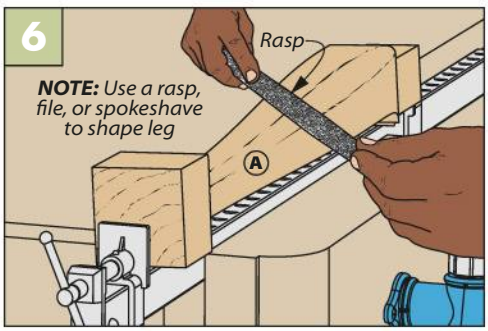

Shape & Smooth. It's up to you to choose the tools best suited to shape the legs.

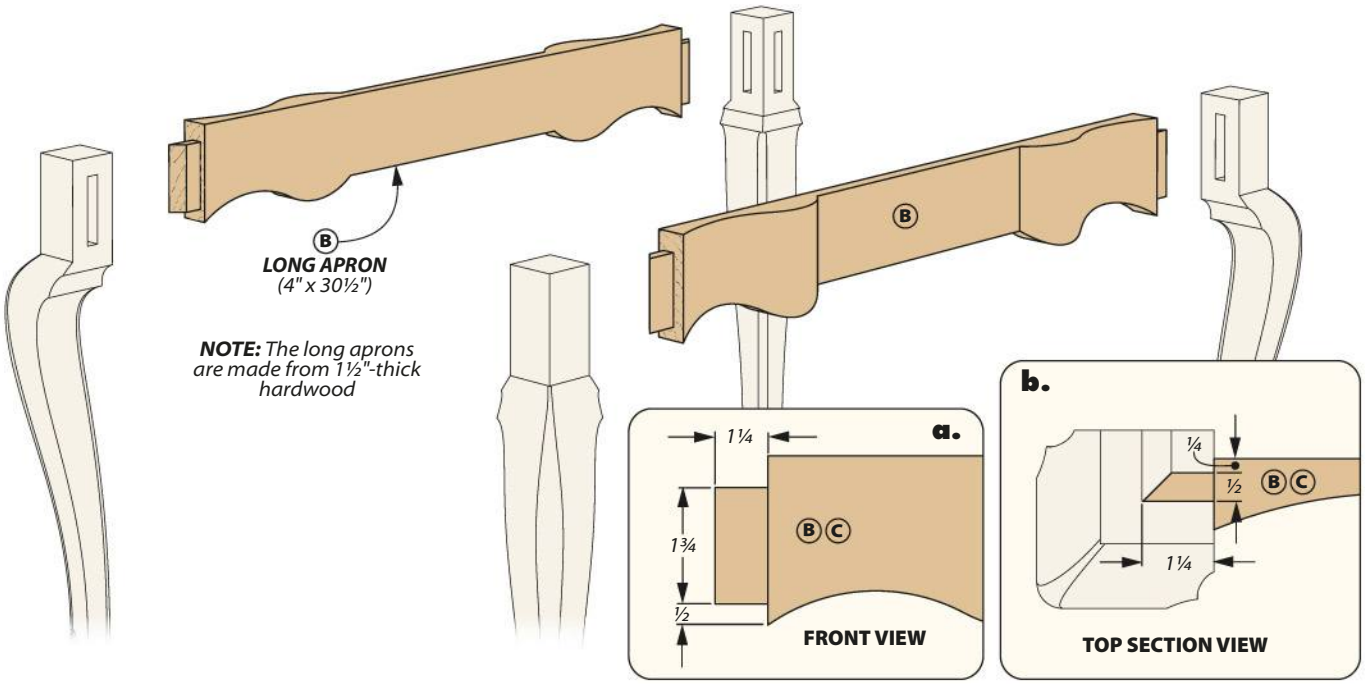

Crafting elegant **APRONS**

The legs aren't the only part of the tea table that have curves to show off. The aprons ripple out from the corner posts in billowy, undulating ribbons. To accommodate this ornamentation the aprons are made from 1½"-thick cherry blanks.

To create these shapes in an orderly fashion, there are patterns for the long and short aprons online at *Woodsmith.com/266* that you can use to make templates. Since all the templates are aligned to the shoulders of the aprons, the first order of business is making the tenons on the ends. Details 'a' and 'b' in the drawings above show the tenon dimensions. After making the tenons it's best to miter the ends like you see in Figure 1 below. The thought behind this miter is to allow maximum glue surface for each tenon (detail 'b'). Now let's focus on the templates.

TEMPLATE TRACING. The wider template that you see being used in Figure 2 (on the long apron) traces the profile of the ribbon on the face of the apron. The narrow template traces the contour of the ribbon on the top edge of the apron, like you see in Figure 2a. After repeating this process on the other long apron, give the same attention to the short aprons and their templates. Now, at the table saw, you can

SCULPTING THE APRONS

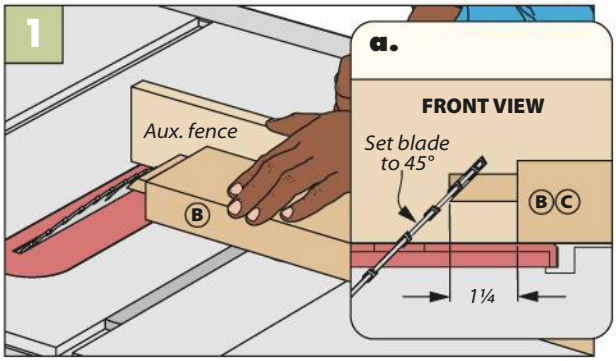

Mitered Tenons. Adding miters to the ends of the tenons is easily done at the table saw.

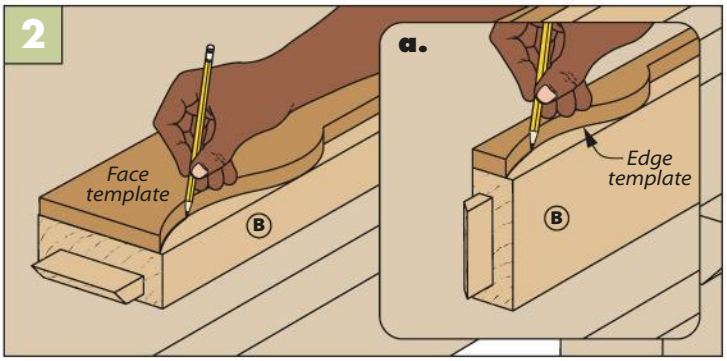

Two Templates. Trace the face and edge (detail 'a') of the aprons with the template that defines the ribbons' location.

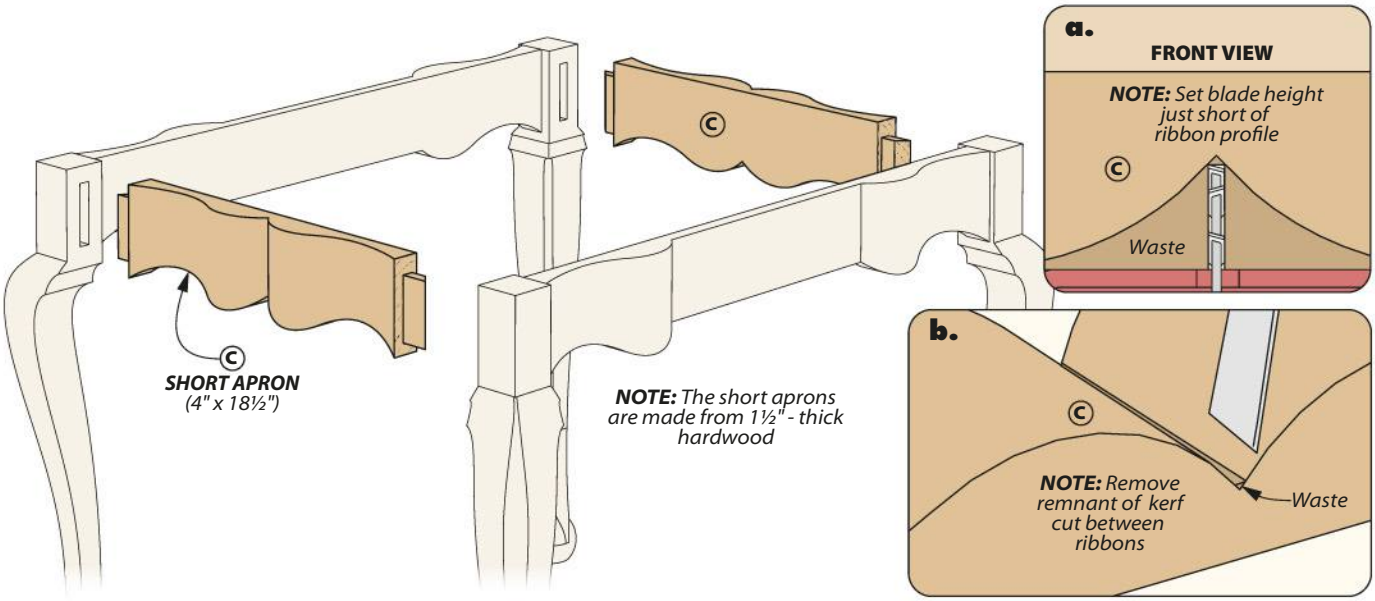

start removing the excess material from the aprons.

Figure 3 shows using the table saw to cut the transition point between the ribbons and the stretcher portion of the aprons. It's a process that's similar to the one you used to define the posts of the legs earlier.

Figure 3a shows the apron face down on the table saw extending the cut across the face of the apron. You'll have to take a slightly different tack to make the ribbons on the short aprons.

SHORT APRONS. The short aprons are made of two ribbons that meet in the center. There is no flat stretcher portion like you have on the long apron.

To start, cut a kerf in the center of the short aprons that almost touches the contour of the ribbons (as you see in detail 'a' above). Completing that detail sets the stage for some flowing work at the band saw.

BAND SAW. Like the legs, all the aprons have waste that needs to be removed from two surfaces. So you'll borrow the same technique — cut the waste off of one surface of the aprons, then tape the waste pieces back on the apron and cut the opposing profile — Figure 4 shows this.

The last task on the aprons is to smooth the faces. Here I'll use the templates in combination with a tall pattern bit chucked into my router table to smooth a little over half of the face. A flush-trim bit will clean up the other half. Lastly, use a chisel to make the point between the ribbons on the short aprons (detail 'b'). Then sand the surfaces smooth.

With that you're ready to glue up the table legs and aprons. You'll want to confirm that the apron frame is square. While that's curing, you can glue up the boards for the top using plain old ¾"-thick material.

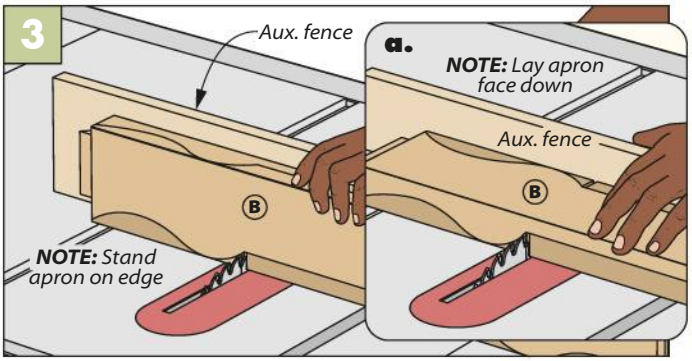

Square Landmarks. Use your table saw to define the point where the ribbon stops and the stretcher of the apron starts.

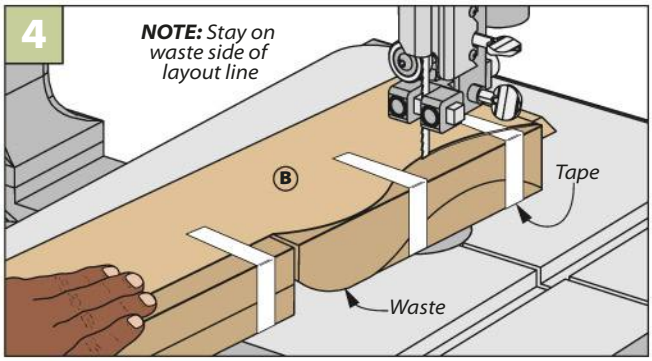

Waste Removal. Over at the band saw, tape holds the waste on the apron from the previous cut that was made.

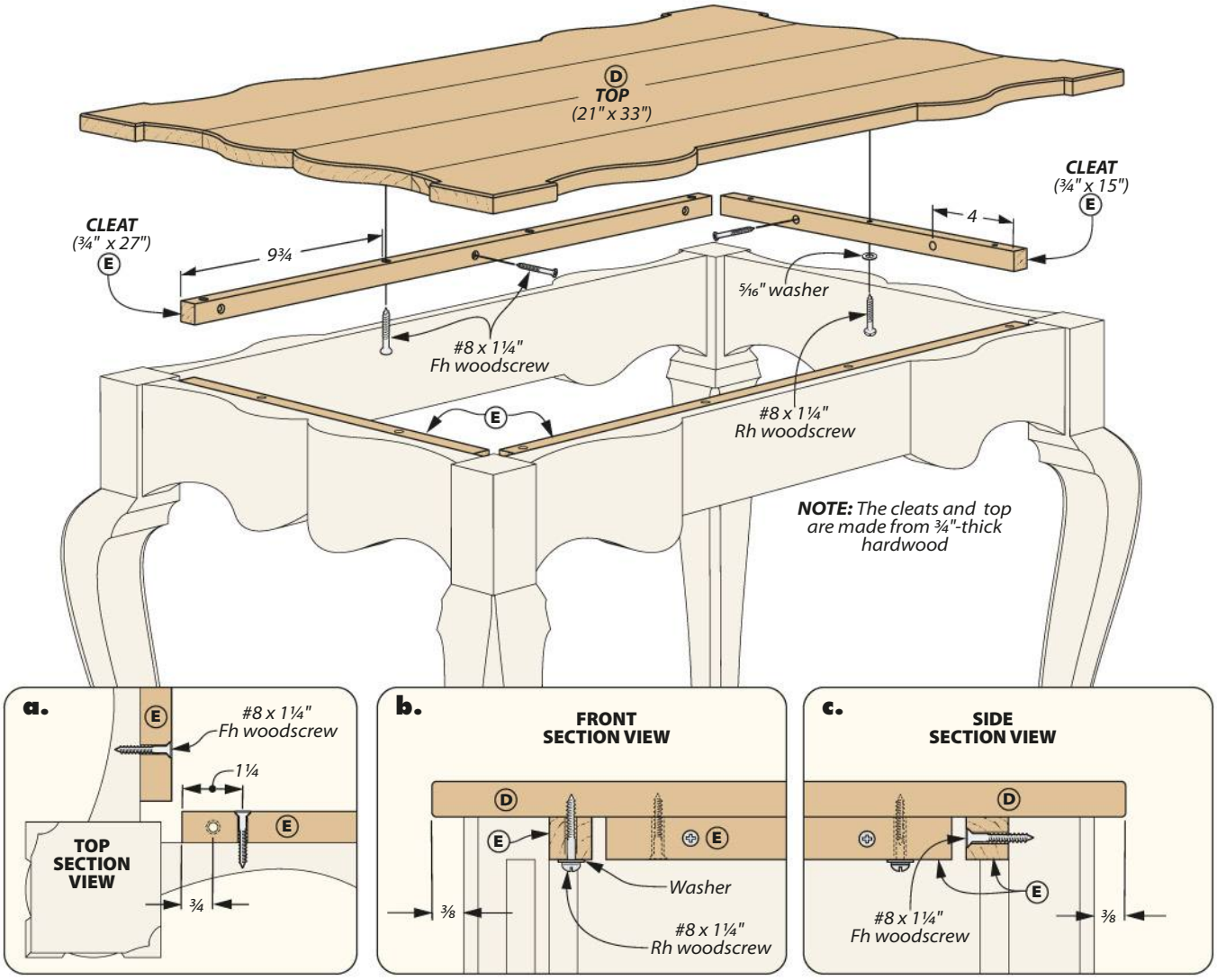

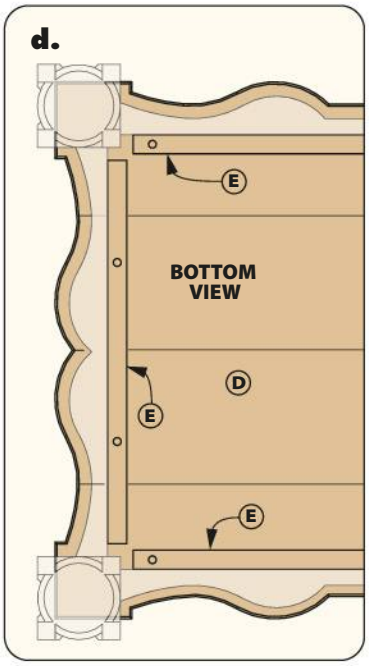

The crowning touch is the TOP

One of the more fascinating things about this project is how each component is complemented by the next. Take the graceful energy of the legs, they're made more kinetic by the ripples of the apron ribbons crashing into them.

And in turn, those two elements when combined, are echoed in a cross section homage (detail 'd') from the top that you're about ready to tackle. If you would allow me to compare it to a symphony, well, you've arrived at the third movement — making the top.

Although I've already mentioned gluing up the top, let's revisit that subject for a moment, starting with wood selection. Cherry, in general, is a fairly well-behaved wood when it comes to grain patterns and I'm not trying to book match the grain for the top. So the main goal was to avoid too much contrast in mixing sap wood and heart wood. What I did do was make the top out of four boards, so the center glue line aligned with the ribbon profile on the top.

Okay, now back to some woodworking. After squaring

SHAPING THE TOP PROFILE

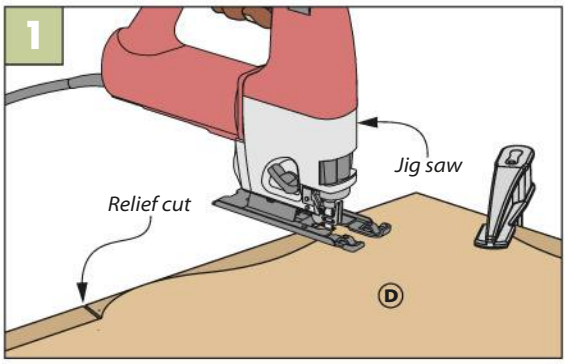

Start with a Jig Saw. Stay on the waste side of the line when roughing out the profile of the top.

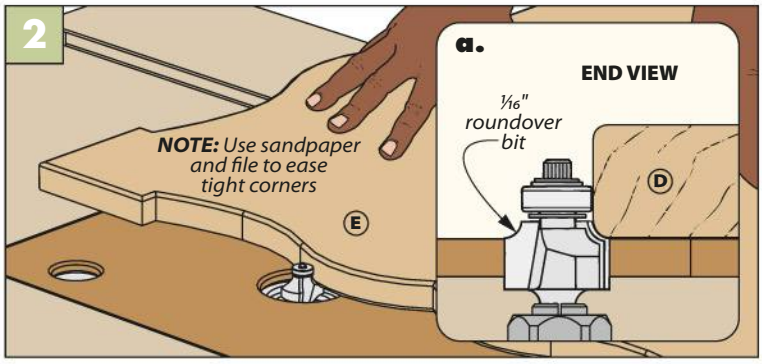

Ease the Edges. A roundover bit in your router table dresses the edges of the top. You'll have some hand work to do in the tight spots.

up the top, use the template you made from the pattern available online at *Woodsmith.com/266* to trace the decorative profile on the corners of the top.

SHAPE THE TOP. An easy way to start removing the waste is to make some cuts at the transition points in the top profile. These points are the square shoulders of the corners, also where the ribbons meet the straight edge (on the long side) or the other ribbon (on the short side). For me, doing the square relief cuts at the band saw is a bit ambitious. So I chose my trusty jig saw to do the work needed (Figure 1). I continued to use the jig saw to remove the majority of the waste, being mindful to stay on the waste side of the lines.

To make the profile pretty, I used the template (held in place with double-sided tape) and a pattern bit in my router to smooth the edges. Employ a chunk of hardboard and said pattern bit on the long straight sections. To complete the top, kiss the edges with a roundover bit (Figure 2).

CLEATS. Fastening the top to the table is done with the cleats you see in the main drawing on the previous page — the cleats attach to the inside faces of the aprons. Make note of the oversized holes on the short cleats for the screws that hold the top. This allows for seasonal movement. Use a washer and round head screw for those holes. By the way, to ease installation, I always apply a little beeswax to the screw threads.

As you position your tea table (out of the sun of course) you can imagine Mr. Goddard thinking — *"$8 million dollars ... I could have bought England with that!"* W

Materials, Supplies & Cutting Diagram

A	Legs (4)	3 1/8 x 3 1/8 - 25 1/8	**D**	Top (1)	3/4 - 21 x 33
B	Long Aprons (2)	1 1/4 x 4 - 30 1/2	**E**	Cleats (4)	3/4 x 3/4 - 86 rgh.
C	Short Aprons (2)	1 1/4 x 4 - 18 1/2			

- (10) #8 x 1 1/4" Fh Woodscrews
- (14) #8 x 1 1/4" Rh Woodscrews
- (14) 5/16" Washers

1 1/4" x 7"- 78" Cherry (Two Boards @ 5.7 Bd. Ft. Each)

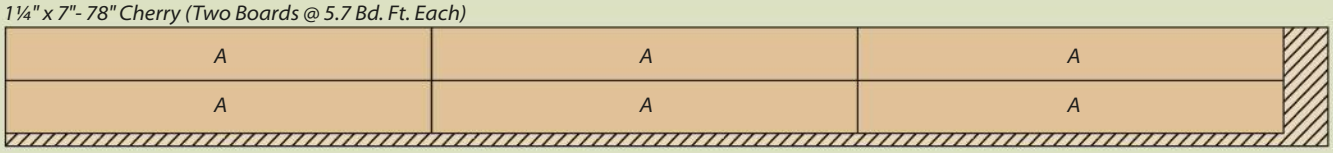

1 1/2" x 4 1/2"- 54" Cherry (Two Boards @ 3.4 Bd. Ft. Each)

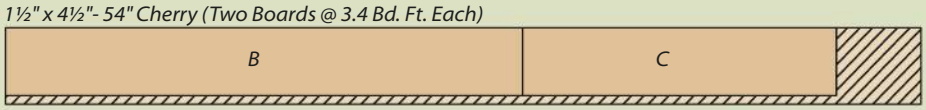

***NOTE:** See Sources on page 66 for turning blank supplier instead of glued up (A) blanks*

3/4" x 6 1/2"- 72" Cherry (Two Boards @ 3.3 Bd. Ft. Each)

▲ The pair of sawhorses, along with their optional worksurface and shelf, are easy to set up and convenient to store when not in use.

Written by: Rob Petrie; Project Design: John Doyle

Sawhorse Workbench

These humble horses quickly transform into a full-size workstation when you need it — and tuck neatly out of sight when you don't.

Sawhorses can be some of the most underappreciated tools in the shop, and it's easy to see why. Whether supporting broad panels of plywood or long, rough stock, they take a beating with every use, and they don't need to look pretty to work well. However, sawhorses are a necessity in nearly any shop, and a good set will serve you well for some time. The ones here are meant to do exactly that, and more.

PORTABLE WORKSPACE. Sawhorses aren't just for sawing unwieldy pieces to a manageable size. When you're low on bench space, or when you're working away from the shop, a piece of plywood on sawhorses makes for a great makeshift bench, but this project takes it one step further.

An optional worksurface and shelf transform an otherwise simple-yet-sturdy set of sawhorses into a mobile workbench. So, whether you're working on a project outside the shop or you simply need some extra space, these sawhorses meet the need.

SOLID CONSTRUCTION. Naturally, we didn't slouch on the construction here. The horses themselves are made of thick Douglas fir, joined with some hefty through mortise and tenons. They're glued up with epoxy, then pegged with dowels. Couple that with a worksurface and shelf made from Baltic birch plywood and you've got a workstation that can take a beating and look good doing it.

▲ Dog holes in the worksurface let you use hold-downs and other accessories to work on pieces of all sizes, wherever you need them.

Illustrations: Dirk Ver Steeg

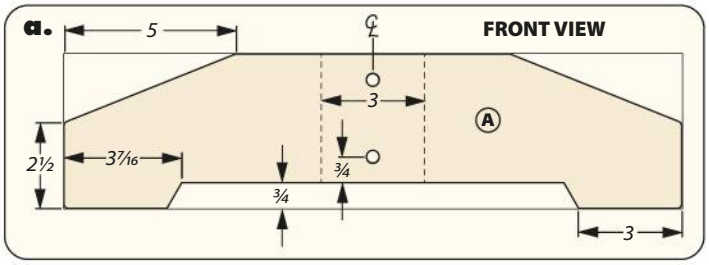

A strong set of **LEGS**

First and foremost, a set of sawhorses needs to be tough and stable. The feet and posts that make up the legs are each glued up from 1½"-thick blanks of Douglas fir and joined by beefy mortise and tenon joints. I began at the very bottom: the feet.

FEET. After cutting the foot blanks to size, you'll first need to cut a dado through the center of each blank (Figure 1 below). Once glued up, these will form the through mortises that accept the tenons on the post.

As you glue up the blanks, be sure to keep the mortise opening aligned between the blanks. The tops taper down, while an notched bottom gives each foot two points of contact for better stability (detail 'a'). Cut the tops of the feet to shape at the band saw, then clean them up at the edge sander. Establish the shoulders of the notch at the table saw with the blade tilted (Figure 2).

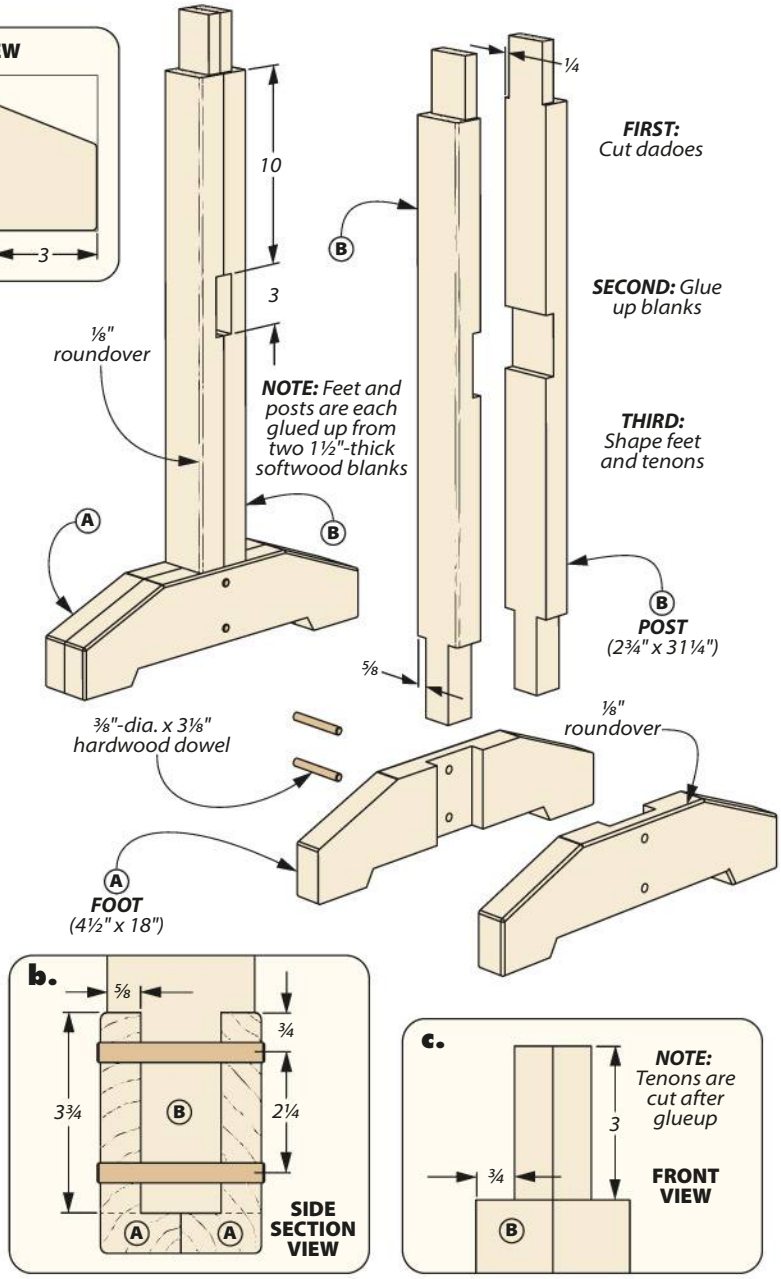

THROUGH MORTISES & ARCHES

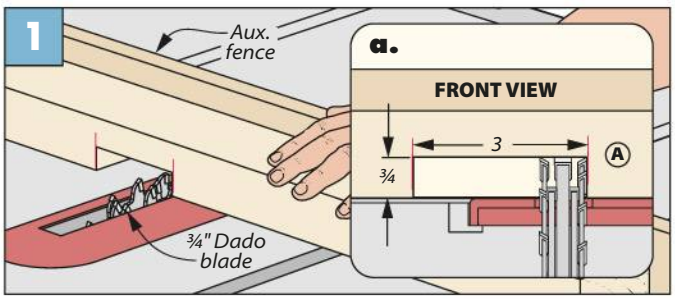

Start with Dadoes. At the table saw, cut the dadoes in each blank that will form the mortises after gluing up.

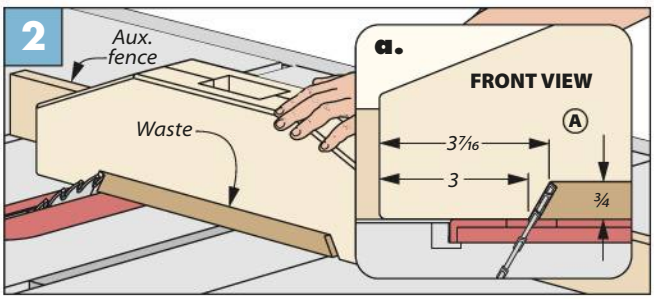

Angled Notches. First establish the angled ends of the foot notches, then remove the remaining waste with a dado

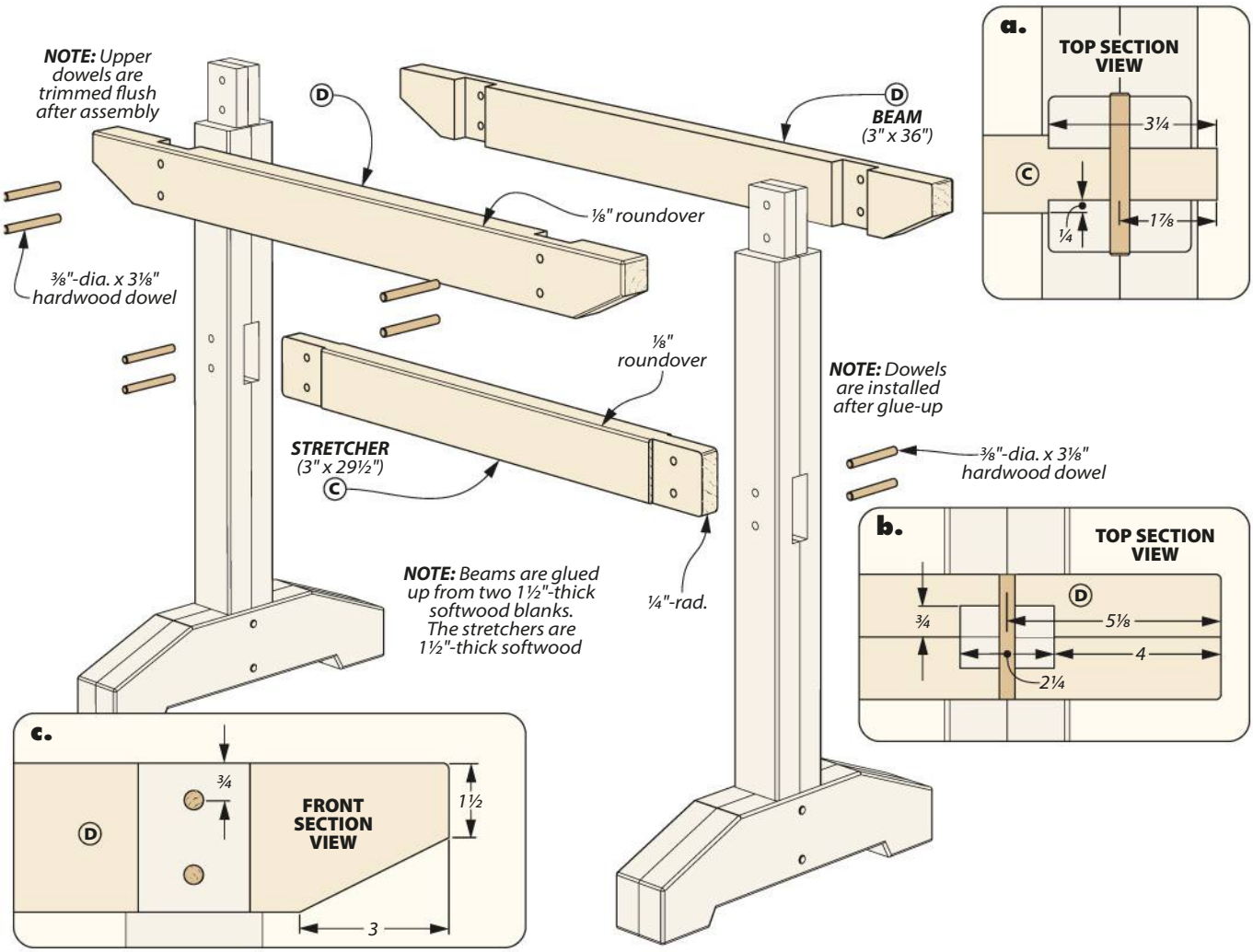

Use a dado blade to remove the rest of the waste and rout a roundover on the edges.

POSTS. The posts are glued up from two blanks as well, and, like the feet, each one will need to have a dado cut through the center before gluing up. The through mortises formed here will fit the stretchers you see in the illustration above.

Once the four posts have been glued up, you can work on the tenons on either end. For both tenons, I removed the waste with a dado blade at the table saw. Just keep in mind that the tenons for the feet are all shoulders and no cheeks.

With the tenons made, round over the posts' edges. Now it's time to work on the stretchers and beams that will join them.

STRETCHERS & BEAMS

As with the legs, the beams and stretchers are thick pieces of fir connected with mortise and tenon joints. After assembly, these pieces will be pinned for an even stronger connection.

STRETCHERS. Begin by sizing the stretchers. Next, use a dado blade to cut the tenons on either end (detail 'a'). Locate the shoulders of the tenons so the posts will sit parallel. Lastly, take the stretchers over to the edge sander to radius the corners.

ASSEMBLY. Since the joinery on the beams will depend on the distance between the posts, I glued up the feet, posts, and stretchers at this point. I chose epoxy for maximum strength and added curing after for even greater support (detail 'a' above and details 'a' and 'b' on previous page). I also added a chamfer to the dowels — just about 1/32" — and left them proud by 1/16".

BEAMS. The beams are made similarly to the feet and posts:. Cut the blanks to size and cut dadoes for the mortises (detail 'b'). These dadoes will go on either end of the beam to accept the tenons on the posts.

With the dadoes done and the blanks glued up, shape the beams. Cut the angled ends as shown above at the band saw (detail 'c'). Plane or sand them to final shape as needed, then rout the roundovers.

To finish the horses, glue up the beams. Dowel them as well, but trim the ends of the dowels flush (details 'b' and 'c').

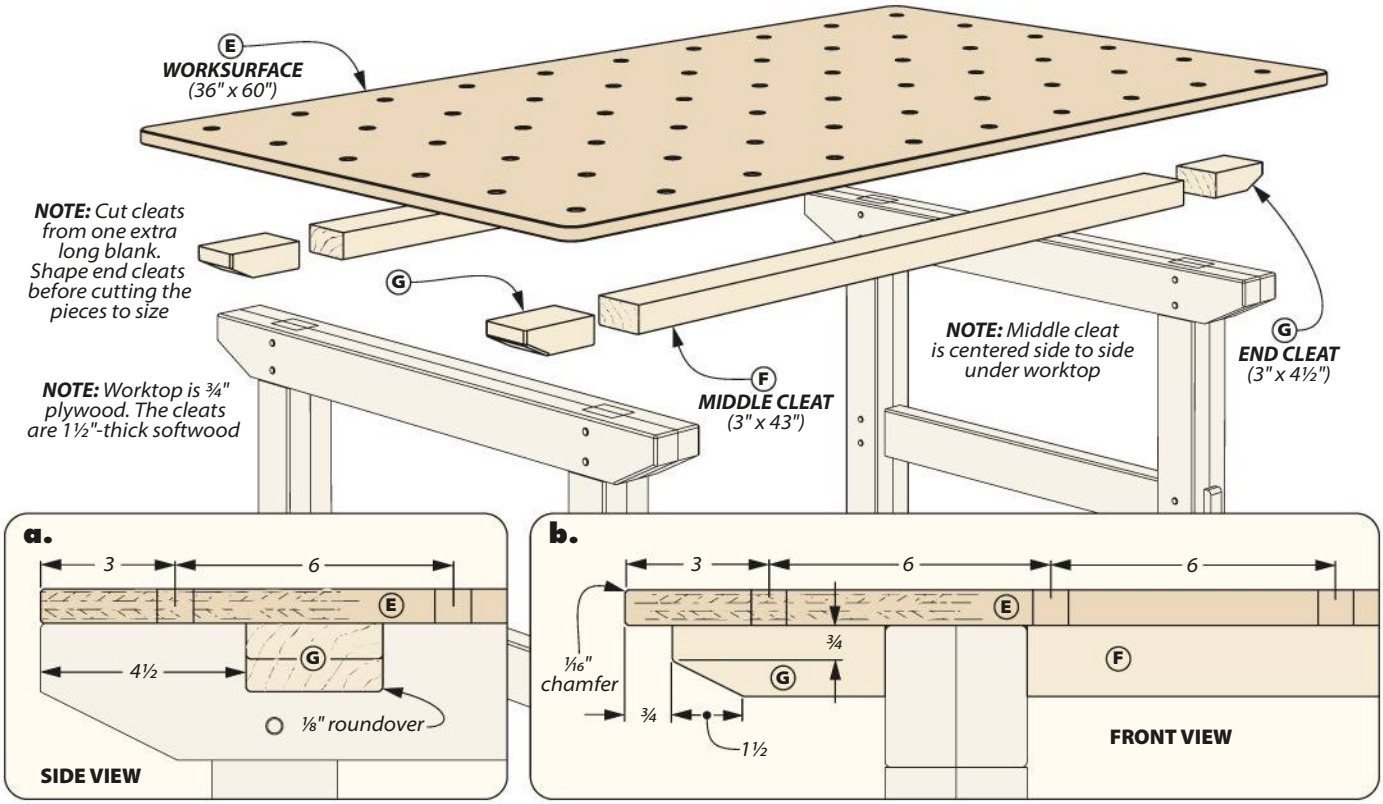

A pop-up **WORKBENCH**

A set of sawhorses on their own are certainly useful, but it doesn't need to end there. The worktop illustrated above and the shelf on the next page turn this simple pair of sawhorses into a conveniently portable and compactly storable workbench.

WORKTOP. The worktop to these sawhorses is made from Baltic birch plywood. As you can see, a series of dogholes drilled across the top accepts accessories, and a set of cleats adds rigidity and prevents the top from sliding around while you're working. After sizing the panel, radius the corners at the jig saw and rout the chamfer on the edges (as shown in detail 'b').

Next come the dogholes. Lay out their positions across the top, using details 'a' and 'b' above. Once you know where you'll be drilling, use a ¾" Forstner bit to drill out the holes (Figure 1), using a backer board to prevent blowout. Chamfer around the holes once they've been drilled.

CLEATS. The cleats beneath the worktop make it quick to position the top on the sawhorses, and hold steady for all manner of work. Begin by cutting two extra-long blanks to width, from which you'll cut one middle cleat and two end cleats. This will make shaping the end cleats initially much easier.

Cut the ends to shape at the band saw (detail 'b'), then clean up the blade marks and round off the end at the edge sander. Finally, cut each to final length.

The cleats are simply glued in place — just be sure to position them between the dogholes.

DRILLING OUT THE DOG HOLES

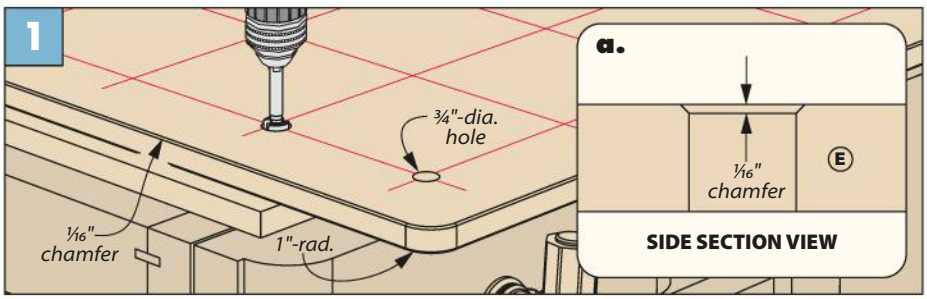

Lay Out & Rout. After laying out the locations of the dogholes on the worktop, drill them out using a Forstner bit, then rout chamfers around the top edges of the holes.

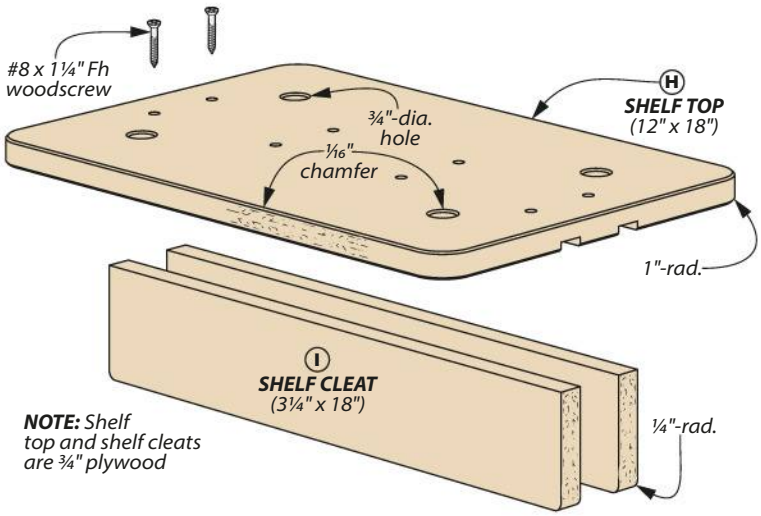

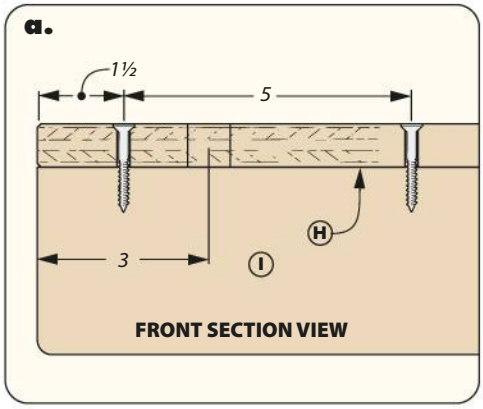

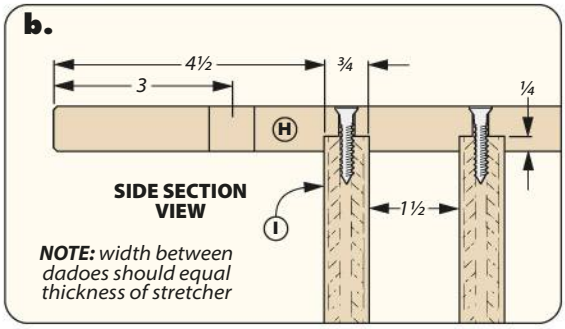

SLIDE-ON SHELF

The last addition to these sawhorses is a simple yet handy one: a shelf. The shelf features a pair of cleats that let it slide in place over a stretcher, allowing you to keep tools out of the way but still in arm's reach.

SHELF TOP. To match the worktop, the shelf top (as well as the shelf cleats) are Baltic birch plywood. As with the worktop, once you've cut the shelf top to size, radius its corners at the band saw and chamfer the upper edges.

Two pieces of business are left on the shelf top before moving to the cleats. First, cut dadoes down the length of the top for the cleats (detail 'b'). These should match the thickness of the stretcher. Next, lay out the holes to hang the shelf when not in use, then drill them with a ¾" Forstner bit and chamfer around them.

CLEATS. To make the shelf cleats, cut them to size and radius their lower corners. To attach them, sink screws down through the shelf top and into the edges of the cleats (detail 'b').

With that, the sawhorses are ready to be used — whenever and wherever you need them. W

Materials, Supplies & Cutting Diagram

A	Feet (8)	1½ x 4½ - 18
B	Posts (8)	1½ x 2¾ - 31¼
C	Stretchers (2)	1½ x 3 - 29½
D	Beams (4)	1½ x 3 - 36
E	Worksurface (1)	¾ ply. - 36 x 60
F	Middle Cleats (2)	1½ x 3 - 43
G	End Cleats (4)	1½ x 3 - 4½
H	Shelf Top (1)	¾ ply. - 12 x 18
I	Shelf Cleats (2)	¾ ply. - 3¼ x 18

- (24) ⅜"-dia. x 3⅛" Dowel
- (8) #8 x 1¼" Fh Woodscrews

ALSO NEEDED: *One 60" x 60" sheet of Baltic birch plywood*

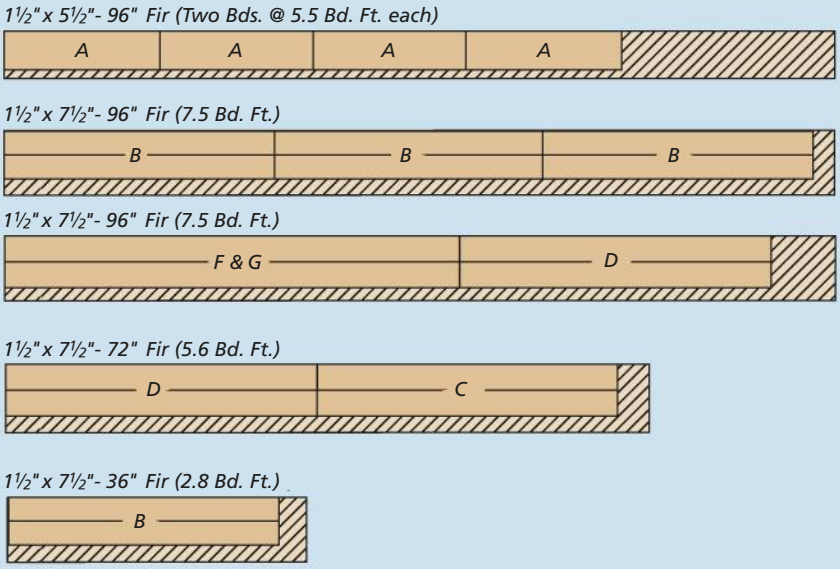

Planter Bench

Here's a stylish multi-purpose upgrade for your deck or patio. Best of all, build it in a weekend.

▲ The planter serves other needs too. Simply change out the lid to create a convenient wastebasket for gatherings.

Outdoor projects seem to come in two flavors: easy-to-build but clunky or high-style and complex. Design Editor Dillon Baker steers a middle path with this planter bench combo. You can see from the photos its clean lines give it strong visual appeal. As we go along, you'll appreciate how quickly and easily it can be constructed.

As big as the outdoors often feels, space on a deck or patio is still at a premium. So this bench is a triple threat. Seating is the obvious function. Under the seat lies some enclosed storage space (always a plus). On the end a planter bin adds greenery to your space, or you can put it to use for other needs.

MODERN MATERIALS. Besides design and function, outdoor projects require other considerations in order to withstand the elements that indoor pieces don't face. The majority of this bench is made from MDF. Yup. I see that eyebrow raise.

This isn't ordinary medium density fiberboard. It's formulated for exterior use and can be found in a wide range of applications from trimwork to signs and garden projects. All it needs is a few coats of paint.

Written by: Phil Huber; Project Design: Dillon Baker

▲ Games under the seat and cold beverages in the planter turn this bench into an outdoor entertainment center.

▲ Torsion hinges hold the lid in any position. Pocket screws keep the construction process moving along smoothly.

Illustrations: Becky Kralicek

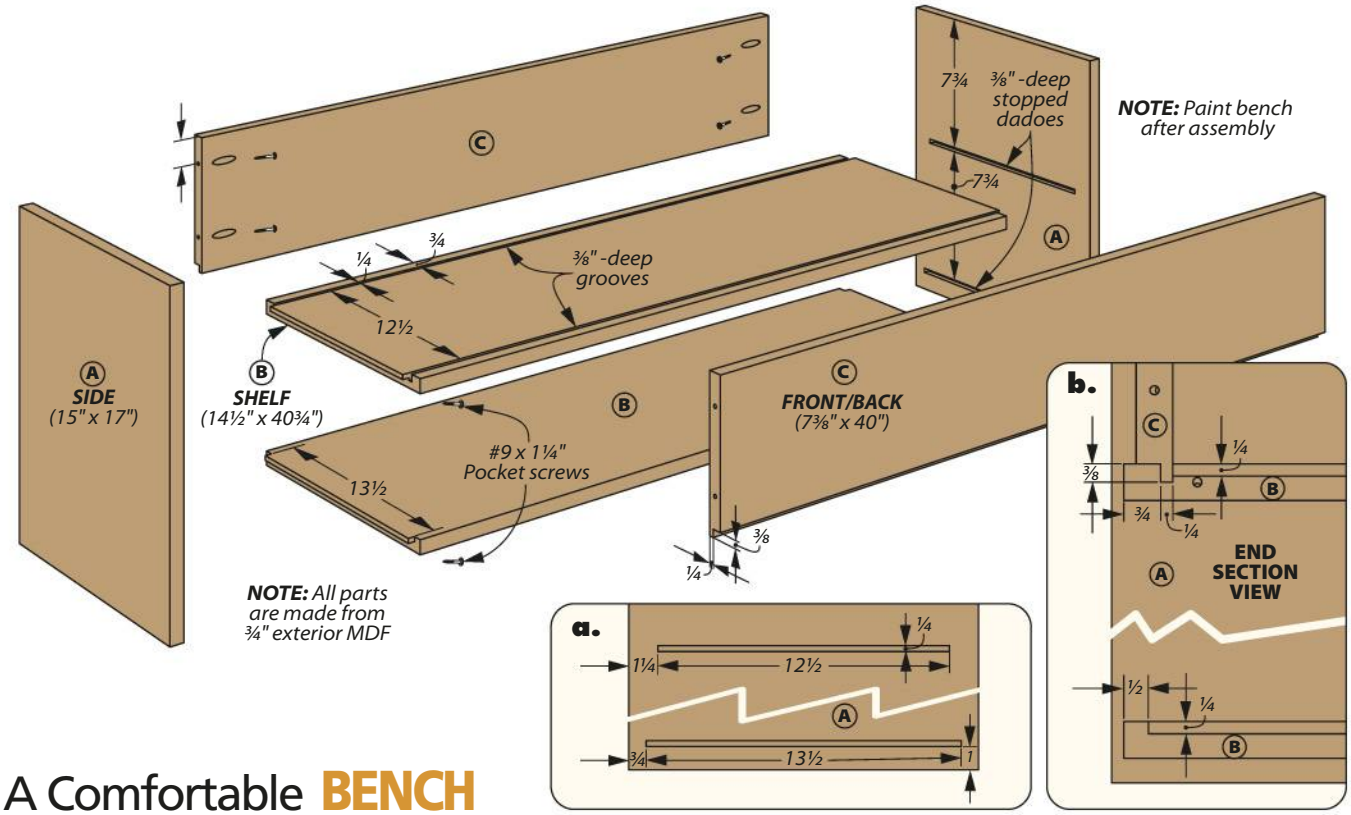

A Comfortable BENCH

There are two separate components to the project. The one we'll tackle first is the seating portion. It's the largest and has more going on.

REINFORCED JOINERY. Pocket hole joinery is a good choice for simple projects like this one. One issue is that when surfaces are offset, keeping the parts aligned while driving the screws is tough. The solution is to create joints that register the parts (and offer increased glue surface). The pocket screws pull the joints together allowing you to keep working.

The sides of the bench are an example of this theory in action. They feature stopped dadoes to capture the shelves (detail 'a'). Take note that the dadoes are different in length. Figure 1 below shows the method I used to cut the dadoes. The source for the small pattern bit is on page 66.

SHELVES. The two shelves are identical in size, but differ in details. In detail 'b' you can see a pair of grooves that run the length of the upper shelf. These house the front and back to create an enclosed storage space. The grooves can be cut on the table saw, as in Figure 2.

Reset the dado blade and rip fence to cut a rabbet that forms a tongue on each end of the shelves, as illustrated in Figure 3.

PANEL JOINERY

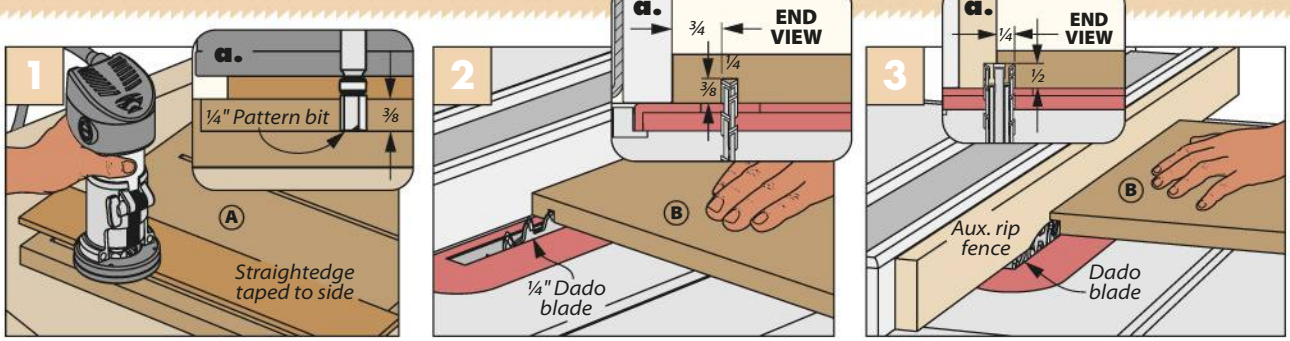

Stopped Dadoes. Carefully tilt the router bit into the workpiece keeping the bearing against the guide.

Long Grooves. Use shims to match the dado blade width to the router bit for matching joinery.

Intersecting Tongues. Aim for a press fit so that the narrow tongues don't snap off in the dadoes and grooves.

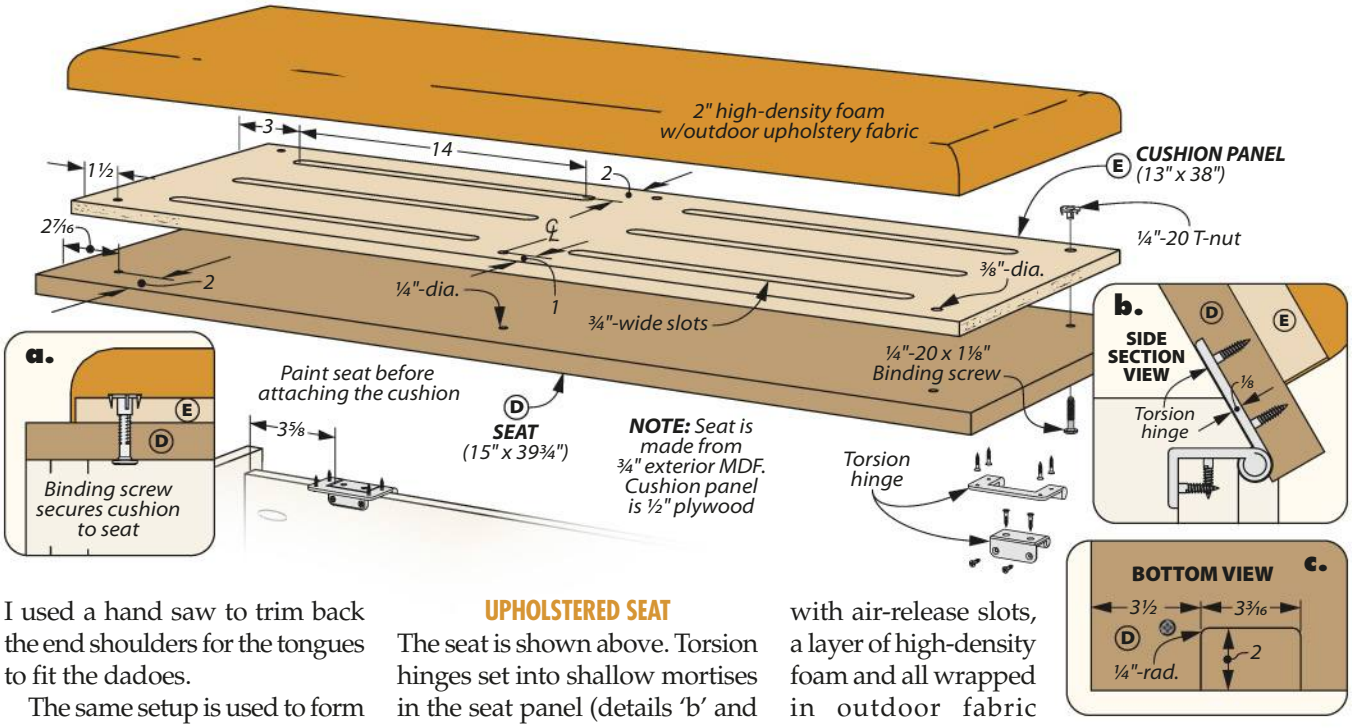

I used a hand saw to trim back the end shoulders for the tongues to fit the dadoes.

The same setup is used to form tongues on the front and back. Then you can drill pocket holes and assemble the bench. Use waterproof glue, like *Titebond III*.

UPHOLSTERED SEAT

The seat is shown above. Torsion hinges set into shallow mortises in the seat panel (details 'b' and 'c') keep the seat from slamming down when opened.

Attached to that is a cushion made up of a plywood panel with air-release slots, a layer of high-density foam and all wrapped in outdoor fabric (box below). Binding screws and T-nuts allow you to remove the cushion for off-season storage.

EASY UPHOLSTERY

Straight Runs. Staple the fabric around the foam on the straight sections pulling it snug.

Prepare the Corner. At the front and back corners, pull the fabric straight out to create a crisp line.

First Fold. Keeping the lower fabric layer on the panel, fold the corner over the top at about 45°.

Tack It Down. Staple the first part of the fold to the cushion panel making sure the fabric stays tight.

Double Fold. From the opposite direction (end), pull the fabric taut and fold it over the first fold.

Finish the Corner. Add staples to both, fasten the second fold, and lock the corner into place.

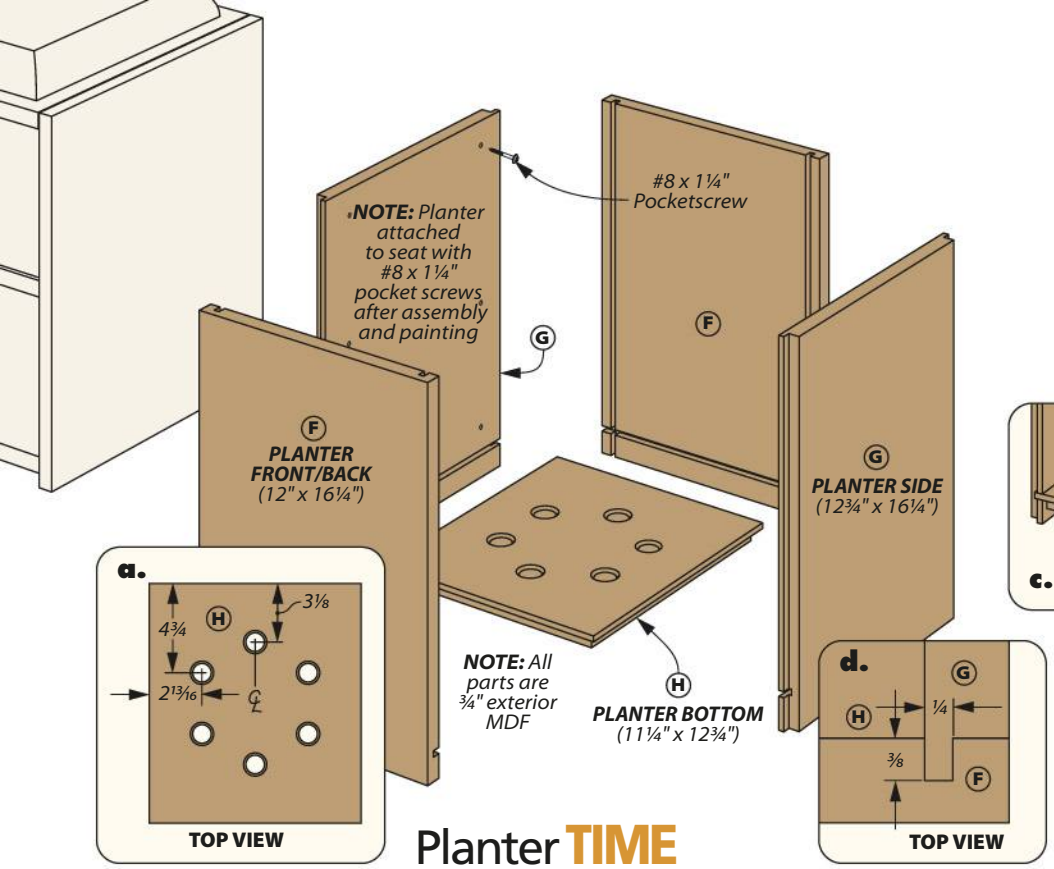

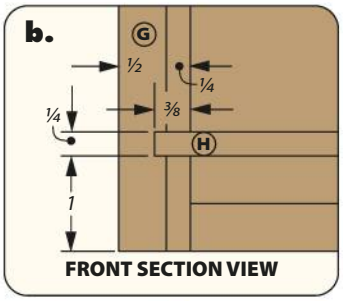

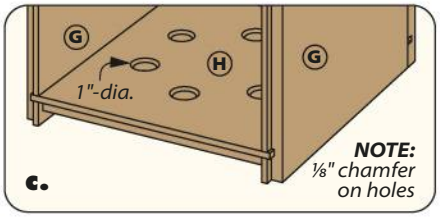

Planter TIME

The second part of the project I'm calling a planter. However, this versatile container can serve several purposes besides a planter. When you're entertaining outdoors, the planter stands in as a drinks cooler. Or it can work as a wastebasket.

The planter is starts with the same exterior MDF we've used so far. Then it takes a more refined turn for a bit of contrast. The planter is wrapped with horizontal strips of clear finished hardwood.

TONGUE & GROOVE. First things first. For the joinery on the planter, it's all tongue (or dado) and groove. Take a look at detail 'd.' The idea here is for the joinery to result in a flush assembly. Take some time to set up the rip fence on your table saw. The inner edge of the grooves cut in the front and back should match the thickness of the MDF pieces. Adjust your setup to form the mating tongues on the sides.

PERFORATED BOTTOM. The bottom panel rests in dadoes cut in the front, back, and sides. This is shown in detail 'b.' A rabbet cut on all four edges of the bottom accommodates these narrow dadoes.

Trapped water is the kryptonite of exterior projects. I added a pattern of drainage holes to the bottom, as you can see in detail 'a.' A slight chamfer

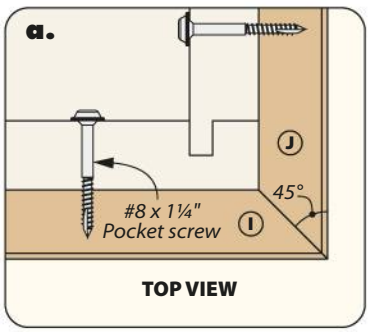

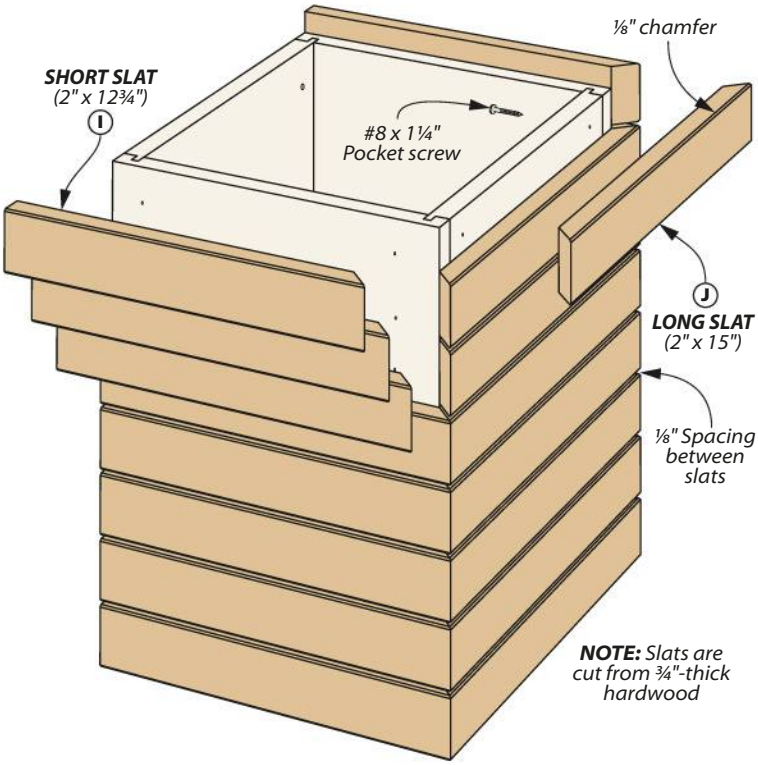

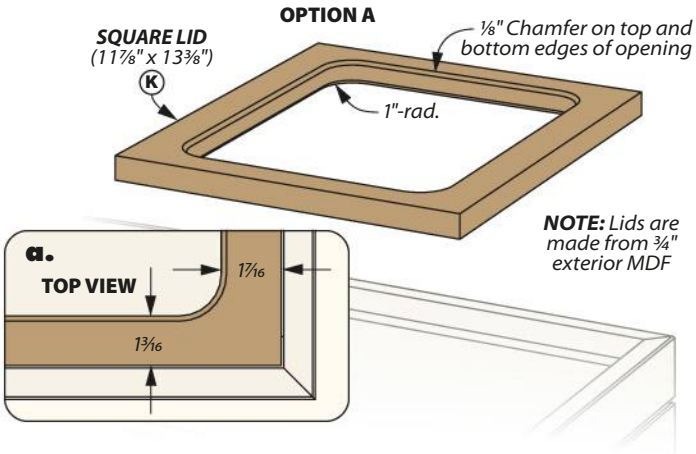

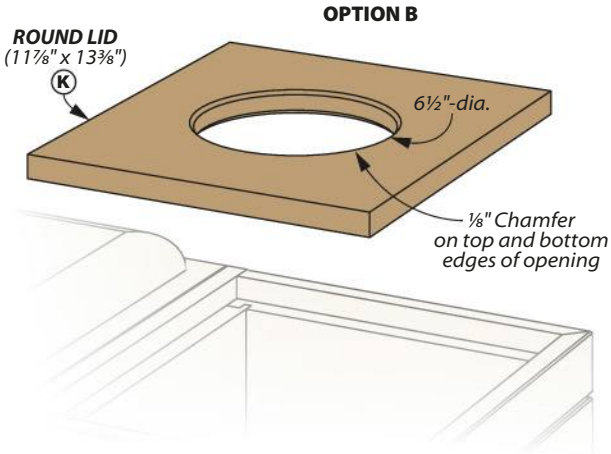

on top and bottom edges of the holes eases the escape path for any water inside.

GLUE IT UP. Grab the clamps and glue to assemble the planter. Squareness is key in order for the hardwood trim to look right at the end. Then take the time to apply a few coats of exterior paint for enhanced durability.

The planter is attached to the bench with screws. Even though these aren't pocket holes, I still used the exterior pocket screws. The wide washer head draws the parts together tightly. The planter is centered front to back and flush with bottom.

HARDWOOD TRIM. Using narrow slats of hardwood to finish off the planter helps break up the look of the wide painted panels. You want to select something that will stand up to the elements. We chose ipe — a dense tropical hardwood. Cedar, white oak, cypress, or redwood are solid domestic options.

MITERS. The slats meet at the corners with miters to punch up the seamless look. I cut the shorter front and back pieces first as a way to dial in the length of the longer end slats.

This brings up an important point. While I included the lengths of the parts in the lower drawing on the previous page, your version will probably differ. The goal is a tight miter rather than hitting a specific number.

The same principle goes for the spacing between the slats. The top set of slats line up with the top of the bench and the lowest row is raised 1/8" from the bottom. Install those first and space the remaining slats equally. A smaller chamfer on the edges of the slats disguises minor variations in the spacing.

I attached the slats with a belt and suspenders approach. A bead of construction adhesive along with a pair of screws ensures they'll stay in place.

NICE LID

The upper row of slats creates a pocket for the final piece — the lid. Actually, I made two versions, as you can see in the drawings above. A lid with a square opening for plants or a beverage center. The smaller round opening in the second one is for wastebasket mode.

I've been pitching this bench as an addition to your deck or patio, but there are other options. I could also see this as an entry bench or in use in an enclosed porch. In fact, once you complete this one, you may find yourself starting up on another one. W

Materials, Supplies & Cutting Diagram

A	Ends (2)	¾ MDF - 15 x 17
B	Shelves (2)	¾ MDF - 14½ x 40¾
C	Front/Back (2)	¾ MDF - 7⅜ x 40
D	Seat (1)	¾ MDF - 15 x 39¾
E	Cushion Panel (1)	½ ply. - 13 x 38
F	Planter Frt./Bk. (2)	¾ MDF - 12 x 16¼
G	Planter Sides (2)	¾ MDF - 12¾ x 16¼
H	Planter Bottom (1)	¾ MDF - 11¼ x 12¾
I	Short Slats (16)	¾ x 2 - 12¾
J	Long Slats (8)	¾ x 2 - 15
K	Lids (2)	¾ MDF - 11⅞ x 13⅜

- (74) #8 x 1¼" Pocket Screws
- (6) ¼"-20 x 1⅛" Binding Screws
- (6) ¼"-20 T-Nuts
- (1 pr.) 30 inch-pound Torsion Hinges
- (1) 2" x 13" - 38" High Density Foam
- (2 yrd.) Outdoor Fabric

¾" x 4½" - 72" Ipe (2.3 Bd. Ft.)

¾" x 6½ " - 84" Ipe (3.8 Bd. Ft.)

ALSO NEEDED: *One 48" x 96" Sheet of ¾" Exterior MDF, One 48" x 48" Sheet of ¾" Exterior MDF, One 24" x 48" Sheet of ½" Baltic Birch Plywood*

IN THE Shop

Outdoor Hardware

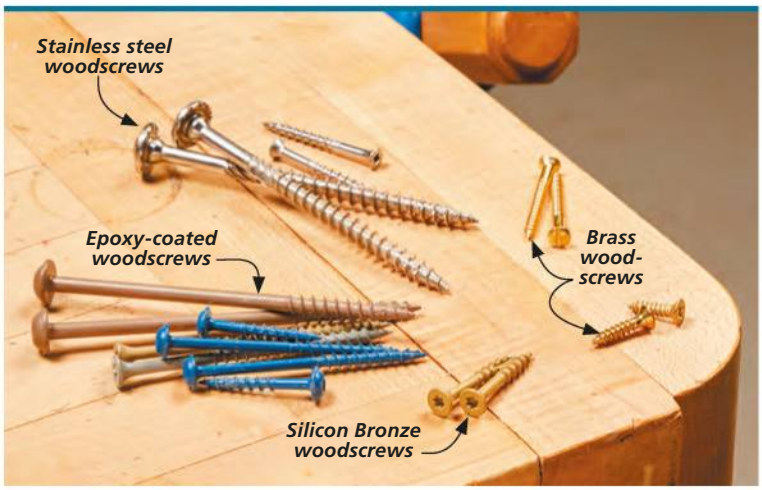

▲ Outdoor projects require outdoor-rated hardware. There are a variety of options for woodworkers. Coated woodscrews are the least expensive. Stainless steel, brass, and silicon bronze screws cost more but last longer.

Part of the appeal of building projects yourself is the ability to create quality pieces that stand the test of time. As woodworkers, we like to sweat the details of design, construction, and finishing. All those things get extra attention when it comes to building a project that will spend its days outdoors.

Wide temperature swings, intense sunlight, drastic humidity changes, and exposure to rain, snow, and wind all conspire to wear down your projects. Let's look at one aspect of building for the outdoors: choosing fasteners.

THE STEEL STANDARD. The "standard" woodscrews you have in your shop are made of steel for its strength and longevity. They likely have a shiny zinc coating. The coating provides adequate protection — for indoor use. It's quite thin and not

Written by: Phil Huber

intended to eliminate corrosion due to high levels of moisture.

As steel corrodes the fastener loses strength. In addition, chemical reactions occur between the metal and the wood causing unsightly dark stains.

ZINC STINKS. There's another type of zinc coating, hot-dipped galvanized, that's intended for exterior use. The hardware is dunked in a tank of liquid zinc. You can recognize these by the dull, crusty finish.

I avoid these fasteners. In my experience, the coating is too uneven and doesn't seem to last as long as the alternatives we'll get to in just a moment. Let's move along.

EPOXY COATED. I'm not opposed to coatings. The coating just has to be done right. One option is epoxy-coated fasteners, as shown in the upper right photo. The epoxy used here results in a more consistent and durable coating. It also seems that the coating helps the screw thread into the wood easier.

Epoxy isn't bulletproof, so you want to take care when driving the screws. The driver bit can damage the coating. The same holds true for the threads. Repeatedly driving a screw can cause the coating to come loose. Coatings offer corrosion defense at a relatively low cost, though coated screws still cost more than interior woodscrews.

STAINLESS STEEL. Coatings can be damaged and degrade over time. Another path to take on the road to durable fasteners is to alter the steel itself so that it resists corrosion. I'm talking about stainless steel. Alloying chromium with the steel prevents the hardware from rusting.

This makes it my exterior fastener of choice. What I like about stainless steel is its strength. The screws act just like the fasteners I use in my interior projects.

Stainless steel hardware is available in a wide variety of formats and sizes, as you can see in the lower right photo. These woodscrews cost more than coated screws do, however, the reliabilty more than makes up for it in my opinion.

▲ The tannins in white oak that naturally resist decay also cause ordinary steel fasteners to stain and rust. Outdoor hardware uses coatings or corrosion-resistant metals to help projects last.

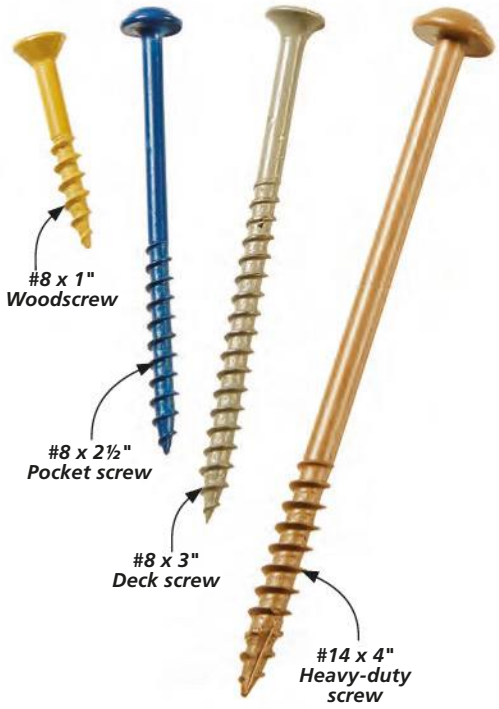

▲ Epoxy-coated woodscrews come in sizes and styles similar to typical woodscrews. Choose the longest screws that will work for the strongest assembly.

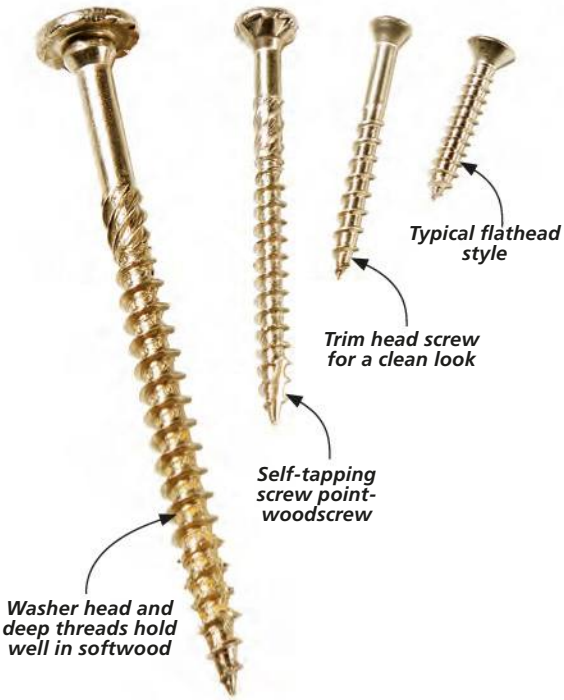

▲ Stainless steel screws offer plenty of strength and outstanding resistance to corrosion. You can find them in most hardware stores and home centers.

▲ Brass and silicon bronze woodscrews blend right in with the color of some outdoor wood species like the cedar used in this trellis, and cypress.

▲ Brass hardware is easier to find and less expensive than silicon bronze woodscrews.

▲ While similar in appearance, silicon bronze fasteners are stronger than brass screws.

BRASS & BRONZE

There are other corrosion-resistant metals than stainless steel: brass and silicon bronze. Both of these are alloys that are primarily copper. Zinc is added to make brass. Tin is the other metal in bronze.

BRASS. You can easily find brass fasteners. The cost can vary but usually is comparable to stainless steel. The golden color of brass blends with a lot of wood tones. My only issue is that brass is soft. This requires drilling accurate pilot and clearance holes. Chasing the threads with a steel screws helps as well.

BRONZE. Higher up the price scale is silicon bronze. These fasteners look similar to brass (though usually duller). The added tin makes this alloy stronger. Silicon bronze screws are most commonly used in wooden boatbuilding. As a result, these fasteners can be harder to find locally, unless you live near one of the coasts. Since it's stronger, you can find larger size fasteners than are available for brass. W

WEATHERPROOF ADHESIVES

Options. Most outdoor projects have a mix of glued joints and joints secured with woodscrews. It stands to reason that the glue you use should be rated for exterior use as well. My go-to is Titebond III. It's wood glue and is easy to work with. Epoxy is the other common option in the shop at *Woodsmith*. And for some applications construction adhesive can be a handy addition due to its high tack strength to hold parts in place.

▲ Water is the enemy of adhesives. Choosing a waterproof glue is an important part of outdoor projects.

Woodsmith

Woodsmith Fine Tools Try Square & Scraper Combo

TRY SQUARE

Featuring a blued steel blade and a beech handle with a brass wearplate, this tool is both accurate and attractive. Invaluable for making sure your right angles are…right.

SCRAPER

Made from 0.036" (0.9mm) hardened and tempered high-carbon steel. Use to create a super-smooth, almost glassy surface on your fine furniture projects.

Item #EHTSET

***Try Square and Scraper Combo Set*.....$29** *

store.woodsmith.com

Woodsmith Fine Tools Steel Rule Combo Set

- ✓ **6", 12" & 18"** sizes for every application
- ✓ **Steel rules** with no-glare satin finish
- ✓ **Acid-etched graduations** won't wear off
- ✓ **Handy center-finding rule** on one face
- ✓ **1/16" and 1/32"** increments
- ✓ **Both left and right-reading** scales

As seen on the Woodsmith SHOP TV SHOW!

Item #364020

***Woodsmith Steel Rule Combo Set*.....$39.95** *

*Prices subject to change

Woodsmith eTIPS

- **Valuable Video Tips** from the Woodsmith Shop TV Show
- **Quick & Easy Printable Tips** from Woodsmith Magazine
- **First Look at New Products** — Including Woodsmith Video Plans

SIGN UP TODAY!

WoodsmithTips.com

Sources

Most of the materials and supplies you'll need to build the projects are available at hardware stores or home centers. For specific products or hard-to-find items, take a look at the sources listed here. You'll find each part number listed by the company name. See the left margin for contact information.

MAIL ORDER SOURCES

Project supplies may be ordered from the following companies:

Woodsmith Store
800-444-7527
store.woodsmith.com

amazon.com

Benjamin Moore
benjaminmoore.com

Fair Wind Fasteners
401-344-9706
fairwindfasteners.com

General Finishes
800-783-6050
generalfinishes.com

Jamestown Distributors
800-497-0010
jamestowndistributors.com

JoAnn
800-783-6050
joann.com

Kreg Tool
800-447-8638
kregtool.com

Lee Valley
800-871-8158
leevalley.com

McMaster-Carr
630-833-0300
mcmaster.com

Rockler
800-279-4441
rockler.com

TableLegs.com
800-748-3480
tablelegs.com

Woodcraft
800-225-1153
woodcraft.com

Woodline USA
800-472-6950
woodline.com

Woodpeckers
800-752-0725
woodpeck.com

CLAW FOOT LEG *(p.18)*

You can find all of the *Pfeil Swis-Made* woodcarving tools your heart desires at Woodcraft. com. The *Dremel* sanding wheels are available online at *Amazon.com*. The flexible sanding sticks are available at local hobby stores.

TABLE SAW TUNE-UP *(p.22)*

- **Woodpeckers**
  Saw Gauge 2.0 . . . . . SG2-WP

PIZZA PEEL *(p.28)*

- **McMaster-Carr**
  Cutoff Wheel *4535A49*
  Press-Fit Rivets. . . . *96082A300*
  Stainless Steel Sheet . .*1421T193*

The pizza peel is lovingly finished with butcher block oil that can be found online at *Amazon.com*. The handle of the rocker knife was finished with *Seal-A-Cel* from *General Finishes*.

NOMAD CABINETS *(p.34)*

- **McMaster-Carr**
  Recessed Pull 13155A61
  Draw Latch 12065A81
- **Rockler**
  Profile Casters 37766
  Locking Profile Casters 34779
  ½"-dia. Magnet Cups 31668
  ½"-dia. Magnet Washers. . . . 37474
  ½"-dia. Magnets 30810
  10" Drawer Guides 48386
  90° Inset Hinges 38411

The chest and case were both finished with a couple of coats of spray lacquer.

TEA TABLE *(p.42)*

- **TableLegs.com**
  Cherry Leg SQ-3500X29-CH

Thinking of staining this glorious table? Don't — let the cherry glow. Just wipe it down with *General Finishes' Seal-A-Cel* and when dry, top it off with two coats of lacquer.

SAW HORSES *(p.50)*

While the sawhorses, worktop, and shelf don't need a finish, we added a few coats of spray lacquer to make them pop in our photographs.

PLANTER BENCH *(p.56)*

- **McMaster Carr**
  T-Nuts 90975A309
  Binding Screws 90835A632
- **Rockler**
  Torsion Hinges 37327
- **Kreg Tool**
  Blue-Kote Screws SML-C125B-100
- **Woodline USA**
  Pattern Bit 47224-S

The exterior MDF is called *Extira*. You can get it from most lumberyards. The fabric and foam came from *JoAnn* craft store. The bench was painted with several coats of Great Barrington Green by *Benjamin Moore*. The planter is Black also by *Benjamin Moore*.

OUTDOOR HARDWARE *(p.62)*

Finding epoxy-coated, stainless steel, and brass hardware is pretty easy. Most hardware stores and home centers stock a full assortment.

Silicon bronze screws are harder to come by. You can find them online, however. Fairwind Fasteners and Jamestown Distributors are two solid sources.

RAZOR-SHARP EDGES in 5 Minutes!

The *Woodsmith* Cabinet Scraper System offers a fool-proof method for getting a consistent, razor-sharp edge using only a few simple tools. The secret is in the *Woodsmith* jig—a unique tool that lets you file the edge and then create the burr.

Item# 7512124
Woodsmith Cabinet Scraper System $59.99

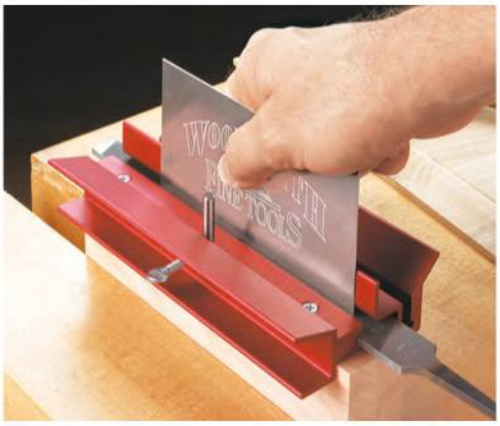

NOTHING Stops a DR®

Stump Grinders

Powerwagons

Rototillers

Lawn Mowers

Lawn & Garden Edgers

There's a DR® for every corner of your property—See more equipment online!

SALE!

FREE SHIPPING

SOME LIMITATIONS APPLY

Go online to request your FREE PRODUCT CATALOG

GoDRpower.com

DR POWER EQUIPMENT

OUR BOND IS OUR WORD

You're serious about your woodworking projects. So are we.

Titebond wood glues offer the proven performance, respected advice and trusted solutions you demand. We remain committed to being there with you for every project.

Titebond®

titebond.com | 1-800-347-4583

01105_5227TF

Sign Up for Free Weekly eTips

Desktop

- Get a video tip sent to you every week
- Includes a printable, step-by-step tip
- Ready when you are — on any device

Laptop

Tablet

Smartphone

Sign up today at Woodsmith.com